ST ANNES COLLEGE OF
ENGONEERING AND TECHNOLGY
Anguchettypalayam ,Panruti

Department of Mechanical Engineering

IV Year /VII Semester
ME3791
Mechatronics
&
IOT

(Regulation2021)

QUESTION BANK & ANSWERS

Prepared by
Mr.V.Balaji., Assistant Professor,
Department Of Electrical and
Electronics Engineering

UNIT – I
SENSORS AND ACTUATORS
PART – A

1. Define a sensor and give an example of its application.

A sensor is a device that detects or measures physical properties and converts them into signals that can be interpreted or used by other devices. An example is a motion sensor used in automatic doors to detect the presence of a person and trigger the door to open.

2. Explain the working principle of a thermocouple.

A thermocouple operates based on the principle of the See beck effect. It consists of two dissimilar metal wires joined at one end to form a junction. When there's a temperature gradient along the length of the wires, it generates a voltage proportional to the temperature difference between the junction and the free ends of the wires. This voltage is used to measure the temperature.

3. Differentiate between analog and digital sensors.

Analog sensors produce continuous output signals that vary in magnitude corresponding to changes in the measured quantity, like voltage or current. Digital sensors, on the other hand, convert the measured quantity into discrete digital signals, typically in the form of binary code (0s and 1s).

4. Describe the function of a strain gauge.

A strain gauge is a sensor used to measure strain or deformation on an object. It typically consists of a thin wire or foil patterned in a zigzag shape, which changes its electrical resistance when subjected to mechanical strain. By measuring this change in resistance, one can determine the amount of strain experienced by the object.

5. How does a Hall Effect sensor work?

www.Pocoffice.com

A Hall effect sensor operates based on the Hall effect, where a voltage difference is induced across a conductor when it's subjected to a magnetic field perpendicular to the current flow. This voltage is proportional to the strength of the magnetic field, allowing the sensor to detect the presence and strength of magnets or magnetic fields.

6. Define an actuator and provide an example of its application.

An actuator is a device that converts energy into mechanical motion to perform a specific task. An example is a hydraulic cylinder used in heavy machinery to lift or move heavy loads.

7. Explain the operation of a solenoid actuator.

A solenoid actuator consists of a coil of wire wound around a ferromagnetic core. When an electric current flows through the coil, it generates a magnetic field that pulls or pushes a plunger or armature connected to the core, causing mechanical motion.

8. Differentiate between pneumatic and hydraulic actuators.

Pneumatic actuators use compressed air to generate mechanical motion, while hydraulic actuators use pressurized fluid (usually oil). Pneumatic actuators are generally faster and more suitable for lighter loads, while hydraulic actuators can handle heavier loads and provide smoother motion.

9. Describe the working principle of a stepper motor.

A stepper motor operates by converting electrical pulses into precise incremental mechanical motion. It consists of multiple coils arranged in a specific pattern around a rotor. By energizing the coils in a specific sequence, the rotor moves in discrete steps.

10. Discuss the importance of position feedback in servo actuators.

Position feedback in servo actuators is crucial for accurately controlling the position, velocity, and acceleration of the actuator. It provides information about the actual position of the actuator, allowing for adjustments to be made to ensure it reaches and maintains the desired position.

11. Give an example of a shape memory alloy actuator and explain its working principle.

An example of a shape memory alloy actuator is a nitinol wire used in medical devices like stents. Nitinol exhibits shape memory properties, meaning it can "remember" its original shape and return to it when heated above a certain temperature.

12. What is the function of a relay in actuator control systems?

A relay in actuator control systems is used to control the flow of electrical power to the actuator. It acts as a switch, allowing a low-power signal to control a higher-power circuit, thus isolating the control circuit from the higher-power actuator circuit.

13. Compare and contrast rotary and linear actuators.

Rotary actuators produce rotational motion, while linear actuators produce linear motion. Rotary actuators are typically used when rotational motion is required, such as opening and closing valves, while linear actuators are used for applications that require linear motion, such as moving a robotic arm along a straight path.

14. Explain the concept of backlash in mechanical actuators.

Backlash in mechanical actuators refers to the clearance or lost motion between moving parts, which can cause a delay or error in the actuator's response when reversing direction. It's essential to minimize backlash to ensure precise and accurate motion control.

15. Describe the role of actuators in robotic systems.

Actuators play a crucial role in robotic systems by converting electrical signals into mechanical motion to control the movement of robotic limbs, grippers, and other components. They enable robots to interact with their environment, perform tasks, and execute complex motions with precision

www.EnggTree.com

PART – B

1. Define mechatronics and explain its modular approach in integrating mechanical, electrical, and computer engineering principles.

Mechatronics is an interdisciplinary field that combines elements of mechanical engineering, electrical engineering, and computer science to design and create intelligent systems and products. It involves the integration of mechanical components, electrical circuits, sensors, actuators, and control systems to develop devices and systems with enhanced functionality, automation, and intelligence.

The modular approach in mechatronics involves breaking down a complex system into smaller, more manageable modules or components. Each module typically corresponds to a specific function or subsystem within the overall system. These modules are designed to be interchangeable and interoperable, allowing for flexibility, scalability, and ease of maintenance and upgrades.

Here's how the modular approach works in integrating mechanical, electrical, and computer engineering principles in mechatronics:

1. **Mechanical Modules**: These modules consist of mechanical components such as gears, motors, linkages, and structures. They are designed to perform mechanical functions like movement, manipulation, and force transmission. Mechanical modules are engineered to meet specific performance requirements and are often modular in design, allowing for easy integration with other components.
2. **Electrical Modules**: Electrical modules include components like sensors, actuators, power supplies, and electronic circuits. They are responsible for sensing the environment, processing signals, and controlling the behaviour of the system. Electrical modules interface between the mechanical components and the computer system, converting physical signals into electrical signals that can be processed and vice versa.
3. **Computer Modules**: Computer modules involve the use of software and hardware components for control, data processing, and communication. These modules include microcontrollers, programmable logic controllers (PLCs), embedded systems, and software algorithms. They provide the intelligence and decision-

making capabilities needed to automate and control the system's operation based on inputs from sensors and user commands.

By breaking down the system into these modular components, mechatronics engineers can design, analyze, and optimize each module independently, focusing on their specific functionality and performance requirements. This modular approach also facilitates collaboration between engineers from different disciplines, as each module can be developed and tested separately before integration into the larger system.

Furthermore, modular designs allow for easier troubleshooting and maintenance, as faulty components can be quickly identified and replaced without affecting the entire system. It also enables scalability and flexibility, as new modules can be added or existing ones modified to adapt to changing requirements or technology advancements.

Overall, the modular approach in mechatronics facilitates the seamless integration of mechanical, electrical, and computer engineering principles, leading to the development of intelligent, efficient, and versatile systems and products

2. Differentiate between sensors and transducers, highlighting their roles in mechatronic systems.

Sensors	Transducers
1. **Definition**: Sensors are devices that detect and measure physical properties or phenomena and convert them into electrical or optical signals that can be processed by other components in the system. 2. **Functionality**: Sensors gather information about the environment or the system itself, such as temperature, pressure, motion, or light intensity. They act as the interface between the physical world and the electronic or digital components of the system. 3. **Output**: Sensors typically produce an output signal that is proportional to the measured quantity. This output signal can be analog (e.g., voltage, current) or digital (e.g., binary code) depending on the type of sensor. 4. **Examples**: Temperature sensors, pressure sensors, proximity sensors, accelerometers, and photodetectors are examples of sensors commonly used in mechatronic systems.	1. **Definition**: Transducers are devices that convert one form of energy or physical quantity into another. They can convert physical phenomena into electrical signals or vice versa. 2. **Functionality**: Transducers serve a broader role than sensors. While sensors specifically detect physical properties and convert them into signals, transducers can perform additional functions such as amplification, modulation, or signal conditioning. 3. **Output**: Like sensors, transducers produce output signals that represent the measured quantity. However, transducers may modify or process the signal before outputting it, depending on their design and intended function. 4. **Examples**: Microphones, loudspeakers, antennas, and strain gauges are examples of transducers. While microphones and antennas convert sound waves and electromagnetic waves into electrical signals, respectively, strain gauges convert mechanical strain into changes in electrical resistance.

www.EnggTree.com

Roles in Mechatronic Systems:

In mechatronic systems:

- **Sensors** play a crucial role in gathering data about the system's environment and conditions. They provide input signals to the system's control algorithms, allowing for real-time monitoring and feedback.
- **Transducers**, on the other hand, may be used at various stages of signal processing within the system. They can convert physical signals detected by sensors into electrical signals suitable for processing by electronic circuits. Transducers may also amplify or condition signals to ensure compatibility with the system's requirements.

3. **Explain the static and dynamic characteristics of sensors and transducers.**

SENSORS:

1. **Static Characteristics**:

a. **Accuracy**: Accuracy refers to the closeness of the sensor's output to the true value of the measured quantity. It accounts for systematic errors such as calibration inaccuracies and offsets.
b. **Precision**: Precision describes the consistency or repeatability of the sensor's measurements under constant conditions. It quantifies random errors, such as noise or variations in readings.
c. **Sensitivity**: Sensitivity indicates the change in output per unit change in the input quantity being measured. It measures how responsive the sensor is to variations in the measured parameter.
d. **Linearity**: Linearity assesses how well the sensor's output corresponds to changes in the input over its operating range. A linear sensor produces an output that is directly proportional to the input.
e. **Hysteresis**: Hysteresis refers to the phenomenon where the sensor's output differs when the input is increasing compared to when it's decreasing. It represents the memory effect within the sensor and can affect its accuracy.

2. **Dynamic Characteristics**:

a. **Response Time**: Response time is the time taken by a sensor to react to a change in the input and stabilize within a specified range of the final value. It's critical in dynamic applications where quick responses are necessary.
b. **Frequency Response**: Frequency response characterizes how well a sensor can track changes in the input signal at different frequencies. It's vital in applications where the input signal varies rapidly over time, such as in vibration monitoring or audio sensing.
c. **Transient Response**: Transient response evaluates how a sensor behaves when subjected to sudden changes or transient inputs. It includes factors like overshoot, settling time, and damping characteristics.
d. **Dynamic Range**: Dynamic range represents the span between the smallest and largest values of the input parameter that a sensor can accurately measure. It's essential for assessing the sensor's ability to handle a wide range of input signals without saturation or loss of sensitivity

www.EngoTree.com

TRANSDUCERS:

Static Characteristics:
a. **Accuracy**: Accuracy refers to the closeness of the transducer's output to the true value of the measured quantity under specific conditions. It encompasses systematic errors such as calibration inaccuracies and offsets.
b. **Precision**: Precision indicates the consistency or repeatability of the transducer's measurements under constant conditions. It quantifies random errors, including noise or variations in readings.
c. **Sensitivity**: Sensitivity measures the change in output per unit change in the input quantity being measured. It reflects how responsive the transducer is to variations in the measured parameter.
d. **Linearity**: Linearity assesses how well the transducer's output corresponds to changes in the input over its operating range. A linear transducer produces an output directly proportional to the input.
e. **Hysteresis**: Hysteresis is the phenomenon where the transducer's output differs when the input is increasing compared to when it's decreasing. It represents the memory effect within the transducer and can impact its accuracy.

Dynamic Characteristics:

a. **Response Time**: Response time is the time taken by a transducer to react to a change in the input and stabilize within a specified range of the final value. It's crucial in dynamic applications where rapid responses are necessary.
b. **Frequency Response**: Frequency response characterizes how well a transducer can track changes in the input signal at different frequencies. It's essential in applications where the input signal varies rapidly over time, such as in vibration monitoring or audio sensing.

c. **Transient Response**: Transient response evaluates how a transducer behaves when subjected to sudden changes or transient inputs. It includes factors like overshoot, settling time, and damping characteristics.

d. **Dynamic Range**: Dynamic range represents the span between the smallest and largest values of the input parameter that a transducer can accurately measure. It's essential for assessing the transducer's ability to handle a wide range of input signals without saturation or loss of sensitivity.

4. Discuss various types of transducers including resistive, capacitive, inductive, and resonant transducers. Provide examples of each type and describe their working principles.

1. **Resistive Transducers**:

Example: Strain gauges

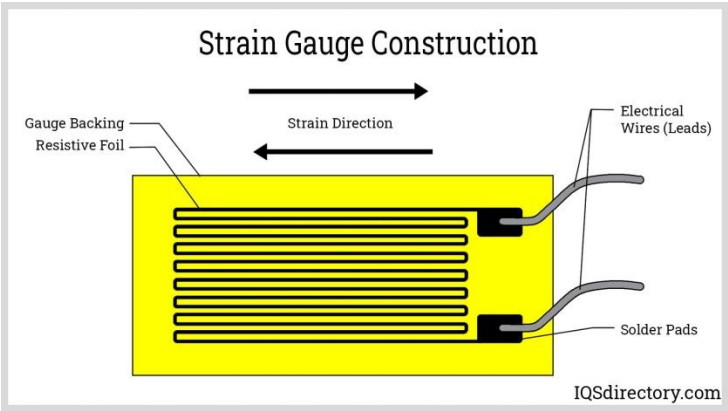

www.EnggTree.com

Working Principle: Strain gauges are used to measure the strain (deformation) in an object. They consist of a thin wire or foil arranged in a grid pattern. When the object undergoes deformation, the resistance of the strain gauge changes proportionally to the applied strain. This change in resistance is then measured and correlated to the amount of strain experienced by the object.

2. **Capacitive Transducers**:

Example: Capacitive pressure sensors

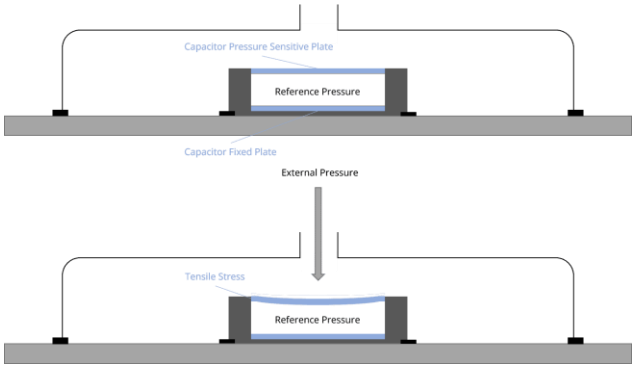

Working Principle: Capacitive pressure sensors utilize the change in capacitance due to mechanical deformation to measure pressure. They consist of two conductive plates separated by a dielectric material. When pressure is applied, the distance between the plates changes, altering the capacitance. By measuring this change in capacitance, the pressure applied can be determined.

3. **Inductive Transducers**:

Example: LVDT (Linear Variable Differential Transformer)

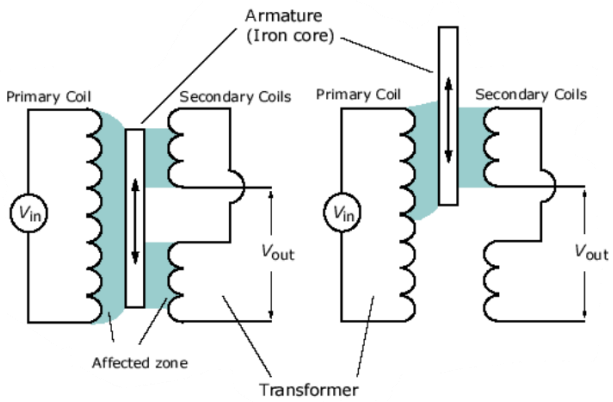

Working Principle: LVDTs are used to measure displacement or position. They consist of a primary coil and two secondary coils wound on a cylindrical former. A movable core is placed inside the former. When the core moves, it induces a voltage in the secondary coils, and the difference between these voltages is proportional to the displacement of the core. This makes LVDTs highly accurate for linear measurements.

4. **Resonant Transducers**:

Example: Quartz crystal oscillators

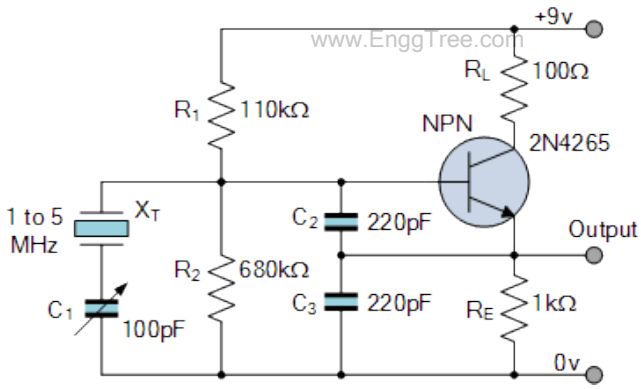

Working Principle: Quartz crystal oscillators use the piezoelectric effect to generate an electrical signal with a specific frequency. When an alternating voltage is applied to the crystal, it vibrates at its natural resonant frequency. Conversely, when the crystal is mechanically stressed, it generates an electrical signal. This property is used in various applications such as watches, clocks, and electronic sensors.

5. Evaluate the importance of solid-state sensors, piezoelectric sensors, and ultrasonic sensors in mechatronic applications.

1. **Solid-State Sensors**:
   (i) Importance: Solid-state sensors, such as accelerometers, gyroscopes, and temperature sensors, are essential components in mechatronic systems for measuring various physical parameters. They provide accurate, reliable, and real-time data, making them invaluable in applications like automotive systems, robotics, aerospace, and industrial automation.
   (ii) Advantages: Solid-state sensors offer several advantages, including high sensitivity, low power consumption, compact size, and resistance to environmental factors such as shock, vibration, and

temperature variations. They can also be integrated easily into electronic systems for data processing and control.

(iii) Applications: Solid-state sensors are used for a wide range of applications, including motion detection, position sensing, structural health monitoring, inertial navigation, and feedback control in mechatronic systems.

2. **Piezoelectric Sensors**:
   (i) Importance: Piezoelectric sensors are widely used in mechatronic applications for detecting and measuring mechanical phenomena such as force, pressure, strain, and vibration. They convert mechanical energy into electrical signals and vice versa, enabling precise sensing and actuation in various systems.
   (ii) Advantages: Piezoelectric sensors offer high sensitivity, fast response times, wide frequency ranges, and compatibility with harsh environments. They can operate in both static and dynamic conditions, making them suitable for applications that require accurate measurements under varying loads and conditions.
   (iii) Applications: Piezoelectric sensors find applications in areas such as structural health monitoring, industrial process control, medical diagnostics, energy harvesting, and consumer electronics. They are particularly useful in automotive systems for engine monitoring, tire pressure sensing, and impact detection.
3. **Ultrasonic Sensors**:
   (i) Importance: Ultrasonic sensors utilize sound waves with frequencies above the audible range to measure distance, level, proximity, and object detection in mechatronic systems. They offer non-contact, accurate, and reliable sensing capabilities, making them ideal for applications where optical or mechanical sensors may be impractical or ineffective.
   (ii) Advantages: Ultrasonic sensors provide long-range sensing capabilities, immunity to environmental factors such as dust, smoke, and ambient light, and versatility in detecting various materials and surfaces. They are also unaffected by color or transparency, enabling consistent performance in different operating conditions.
   (iii) Applications: Ultrasonic sensors are extensively used in automotive parking assistance, industrial automation, robotics, object detection and tracking, liquid level measurement, and security systems. They are particularly valuable in applications where precise distance measurement and obstacle avoidance are critical.

www.EasyEngineering.net

6. Define solid-state sensors and describe their construction and working principles.

Construction: The construction of solid-state sensors varies depending on their specific application and sensing mechanism. However, they generally consist of the following components:

1. **Sensing Element**: This is the core component responsible for detecting the physical quantity being measured. It could be a semiconductor material configured to exhibit changes in its electrical properties in response to the target stimulus (e.g., resistance, capacitance, voltage, or current).
2. **Supporting Electronics**: Solid-state sensors often include integrated electronics for signal conditioning, amplification, filtering, and sometimes digital processing. These components ensure that the sensor's output is accurate, stable, and compatible with the interface requirements of the system it's integrated into.
3. **Encapsulation/Package**: To protect the sensitive sensing element and electronics from environmental factors (such as moisture, dust, or mechanical shocks), solid-state sensors are usually encapsulated within a protective housing or package. This package may also incorporate features for mounting and connecting the sensor to external circuits or systems.

Working Principles: The working principles of solid-state sensors vary based on their design and the physical quantity they're designed to measure. Here are a few common working principles:

1. **Resistive Sensors**: These sensors operate based on changes in electrical resistance due to variations in temperature, pressure, strain, or other stimuli. For example, a thermistor's resistance changes with temperature, while a strain gauge's resistance changes with mechanical deformation.
2. **Capacitive Sensors**: Capacitive sensors measure changes in capacitance resulting from variations in distance, displacement, or dielectric properties. They typically consist of two parallel plates (electrodes) separated by a dielectric material. As the distance between the plates changes, so does the capacitance.
3. **Piezo resistive Sensors**: These sensors utilize the piezoresistive effect, where the electrical resistance of certain semiconductor materials changes in response to mechanical stress or strain. When subjected to

mechanical deformation, the change in resistance can be correlated with the applied force, pressure, or strain.

4. **Hall Effect Sensors**: Hall effect sensors detect changes in magnetic fields using the Hall effect, where a voltage is generated perpendicular to both the current flowing through a conductor and an applied magnetic field. This principle is often used for proximity sensing, position detection, and current measurement.
5. **Optical Sensors**: Some solid-state sensors rely on optical principles, such as photodiodes or phototransistors, which convert light intensity into electrical signals. They find applications in ambient light sensing, proximity detection, and optical encoders.

7. Evaluate the advantages of solid-state sensors over traditional sensor technologies.

1. **Miniaturization and Compactness**:
   (i) Solid-state sensors can be fabricated using microfabrication techniques, allowing for miniaturization and integration of multiple sensing elements on a single chip.
   (ii) This compactness enables their integration into small-scale devices and systems where space is limited, such as smartphones, wearables, and medical implants.
2. **Reliability and Durability**:
   1) Solid-state sensors have no moving parts, reducing the likelihood of mechanical failure and wear over time.
   2) They are less susceptible to mechanical shocks, vibrations, and environmental factors like dust, humidity, and temperature variations, leading to improved reliability and longevity.
3. **Fast Response Time**:
   1) Solid-state sensors typically have faster response times compared to traditional sensors with mechanical components.
   2) This rapid response is particularly advantageous in applications requiring real-time monitoring and control, such as automotive systems, robotics, and industrial automation.
4. **High Sensitivity and Accuracy**:
   1) Solid-state sensors can offer high sensitivity and accuracy in detecting and measuring physical quantities due to their precise electronic components and signal processing capabilities.
   2) They provide consistent and repeatable measurements, leading to improved performance and reliability in critical applications.
5. **Low Power Consumption**:
   1) Many solid-state sensors operate at low power levels, making them suitable for battery-powered or energy-efficient devices.
   2) Their low power consumption minimizes energy usage and extends the battery life of portable electronics, wireless sensor networks, and IoT devices.
6. **Wide Operating Range**:
   1) Solid-state sensors can operate over a wide range of environmental conditions, including extreme temperatures, pressures, and humidity levels.
   2) This versatility allows them to be used in diverse applications and industries, from automotive and aerospace to healthcare and environmental monitoring.
7. **Ease of Integration and Compatibility**:
   1) Solid-state sensors can be easily integrated into electronic systems and interfaced with microcontrollers, processors, and communication protocols.
   2) They are compatible with digital interfaces such as SPI, I2C, and UART, facilitating seamless integration into existing electronic designs and systems.
8. **Cost-Effectiveness**:
   1) With advancements in manufacturing technologies and economies of scale, solid-state sensors have become more cost-effective over time.
   2) Their mass production capabilities and reduced maintenance requirements contribute to lower overall system costs compared to traditional sensor technologies.

www.EasyTree.com

8. Discuss the applications of piezoelectric sensors in force measurement and vibration analysis.

1. **Force Measurement**:
   (i) **Dynamic Force Measurement**: Piezoelectric sensors are commonly used for dynamic force measurement applications where precise and rapid force sensing is required. They can detect forces exerted on them with high accuracy and responsiveness, making them ideal for impact testing, material testing, and biomechanical studies.
   (ii) **Impact Testing**: In impact testing applications, such as crash tests in automotive safety testing, piezoelectric force sensors can accurately measure the impact force and rate of force change during collisions. This data is crucial for evaluating the performance of vehicle components and ensuring occupant safety.
   (iii) **Material Testing**: Piezoelectric sensors are employed in material testing equipment to measure the mechanical properties of materials, including stiffness, elasticity, and strength. They can detect small variations in force during material deformation or fracture, providing valuable insights for material characterization and quality control processes.
   (iv) **Biomechanical Studies**: In biomechanics research and medical applications, piezoelectric sensors are used to measure forces exerted by muscles, tendons, and bones during movement and physical activities. These sensors enable researchers to analyze human motion, study gait patterns, and assess the performance of prosthetic devices and orthopaedic implants.
2. **Vibration Analysis**:
   (i) **Structural Health Monitoring**: Piezoelectric sensors are widely employed in structural health monitoring systems to detect and analyze vibrations in civil infrastructure, aerospace structures, and industrial machinery. By monitoring vibration patterns and frequencies, these sensors can identify potential defects, fatigue cracks, or structural damage in real-time, helping to prevent catastrophic failures and optimize maintenance schedules.
   (ii) **Machine Condition Monitoring**: In industrial applications, piezoelectric sensors are used for machine condition monitoring to assess the health and performance of rotating machinery, such as motors, pumps, and turbines. They can detect abnormal vibration levels, bearing faults, misalignments, and other mechanical issues, enabling predictive maintenance and minimizing downtime.
   (iii) **Acoustic Emission Testing**: Piezoelectric sensors are also employed in acoustic emission testing techniques to detect and locate the occurrence of transient stress waves generated by the sudden release of energy within a material or structure. This method is used for detecting defects, cracks, and structural weaknesses in materials, composites, and welded joints.
   (iv) **Vibration Control and Feedback**: Piezoelectric sensors can be integrated into active vibration control systems to provide real-time feedback and adjust vibration levels actively. By applying counteracting forces or vibrations, these systems can mitigate unwanted vibrations, improve stability, and enhance the performance of mechanical systems and structures.

www.EasyTips.com

PART – C

1. Describe the working principles of ultrasonic sensors and their applications in object detection and distance measurement.

Working Principles:

1. **Generation**: An ultrasonic sensor typically consists of a transducer that converts electrical energy into ultrasonic sound waves. This transducer is often composed of a piezoelectric material that expands and contracts when subjected to an electrical signal, producing ultrasonic vibrations.
2. **Transmission**: Once generated, the ultrasonic waves propagate through the air or another medium toward the target object or surface. The sensor emits a burst of ultrasonic pulses at regular intervals.
3. **Reflection**: When the ultrasonic waves encounter an object in their path, they reflect off the object's surface due to differences in acoustic impedance between the object and the surrounding medium. The time taken for the ultrasonic waves to travel to the object and back to the sensor is proportional to the distance between the sensor and the object.

4. **Reception**: The sensor's transducer also serves as a receiver, detecting the reflected ultrasonic waves. By measuring the time delay between the emission and reception of the ultrasonic pulses, the sensor can calculate the distance to the object using the speed of sound in the medium.

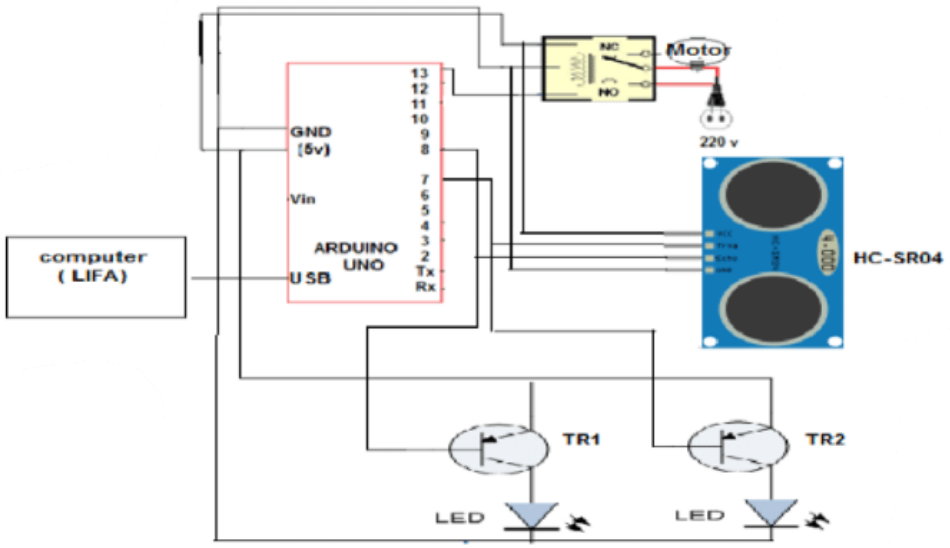

Applications:

1. **Object Detection**:
   - Ultrasonic sensors are commonly used for object detection in various applications, such as robotics, industrial automation, and automotive systems.
   - They can detect the presence or absence of objects within their detection range based on the reflection of ultrasonic waves off the object's surface.
   - In automotive applications, ultrasonic sensors are employed in parking assistance systems to detect obstacles, pedestrians, or other vehicles in the vehicle's vicinity, providing audible or visual alerts to the driver to prevent collisions.
   - In industrial automation, ultrasonic sensors are used for presence detection, part counting, and object positioning in manufacturing processes, conveyor systems, and material handling applications.
2. **Distance Measurement**:
   - Ultrasonic sensors are also widely used for distance measurement in applications where non-contact and accurate distance sensing are required.
   - By measuring the time-of-flight (TOF) of ultrasonic waves, the sensor can calculate the distance to the object using the formula: Distance = (Speed of Sound × Time-of-flight) / 2.
   - Ultrasonic distance sensors find applications in level sensing, liquid level measurement, object positioning, and proximity detection in industrial, agricultural, and consumer electronics applications.
   - For example, in industrial tanks or silos, ultrasonic sensors can measure the level of liquids or granular materials by transmitting ultrasonic pulses and calculating the distance to the material surface based on the time taken for the pulses to return.

2. Discuss the role of actuators in closed-loop control systems and their contribution to precision motion control.

1. **Conversion of Control Signals**:
   (i) Actuators receive control signals from the controller, which may be in the form of voltage, current, pressure, or digital commands.
   (ii) These control signals represent the desired output or motion required to achieve the system's objectives.
   (iii) Actuators translate these control signals into mechanical displacement, force, torque, or other forms of motion or energy output.
2. **Feedback Integration**:

(i) In closed-loop control systems, actuators work in conjunction with sensors to provide feedback to the controller.
(ii) Sensors monitor the actual performance or output of the system and send feedback signals to the controller.
(iii) The controller compares the feedback signals with the desired setpoint and adjusts the control signals sent to the actuators accordingly to maintain or achieve the desired output.

3. **Precision Motion Control**:
   (i) Actuators contribute to precision motion control by providing accurate and repeatable motion or positioning capabilities.
   (ii) They can move or position mechanical components, tools, or payloads with high precision and resolution, ensuring precise control over the system's operation.
   (iii) Actuators with advanced features such as stepper motors, servo motors, linear actuators, and piezoelectric actuators offer fine control over motion parameters such as speed, acceleration, deceleration, and position.
4. **Dynamic Response and Stability**:
   (i) Actuators influence the dynamic response and stability of closed-loop control systems by controlling the system's response to external disturbances or changes in operating conditions.
   (ii) Fast-responding actuators with low inertia and high bandwidth can quickly adjust the system's output to track changes in the set point or counteract disturbances, improving system performance and stability.
5. **Adaptability and Flexibility**:
   (i) Actuators provide adaptability and flexibility in closed-loop control systems by enabling dynamic adjustments to the system's operation based on changing requirements or environmental conditions.
   (ii) They can operate over a wide range of operating conditions, such as varying loads, speeds, temperatures, and pressures, while maintaining precision and reliability.
6. **Application Diversity**:
   (i) Actuators are used in a wide range of applications across various industries, including robotics, manufacturing, aerospace, automotive, medical devices, and consumer electronics.
   (ii) They are employed in tasks such as robotic manipulation, machine tool positioning, valve and damper control, aircraft flight control, vehicle propulsion, and medical device actuation.

www.EnggTree.com

UNIT – II
SIGNAL CONDITIONING CIRCUITS AND PLC
PART – A

1. Discuss the function of a filter in signal conditioning circuits.

Filters modify the characteristics of an input signal to meet specific requirements for processing or transmission. They can provide frequency selectivity, noise reduction, signal smoothing, bandwidth limiting, impedance matching, phase adjustment, and equalization.

2. Explain the purpose of amplification in signal conditioning.

Amplification increases the strength of a signal, making it suitable for further processing or transmission. It enhances the signal-to-noise ratio (SNR), compensates for signal attenuation, and ensures compatibility with downstream components.

3. Differentiate between analog and digital signal conditioning techniques.

Analog signal conditioning involves processing continuous signals in their original form, whereas digital signal conditioning involves converting signals into discrete digital representations for processing. Analog techniques include filtering, amplification, and modulation, while digital techniques involve sampling, quantization, and digital signal processing algorithms.

4. Discuss the use of analog-to-digital converters (ADCs) in signal conditioning.

ADCs convert analog signals into digital format, enabling digital processing and transmission of signals. They are commonly used in data acquisition systems, instrumentation, and communication systems to digitize real-world analog signals for processing by digital devices.

5. Explain the significance of calibration in signal conditioning circuits.

Calibration ensures the accuracy and reliability of signal conditioning circuits by aligning their performance with known reference standards. It involves adjusting and verifying the calibration settings of components such as sensors, amplifiers, and converters to maintain measurement accuracy over time.

www.EasyEngineering.net

6. Define a Programmable Logic Controller (PLC) and explain its primary function.

A PLC is a specialized industrial computer used to automate control processes in manufacturing and industrial environments. Its primary function is to monitor inputs from sensors and switches, execute control logic based on predefined programs, and activate outputs to control machinery and processes.

7. Describe the role of input and output modules in a PLC system.

Input modules receive signals from sensors and switches, convert them into digital or analog formats, and transmit them to the PLC's central processing unit (CPU) for processing. Output modules receive control signals from the CPU, convert them into signals suitable for actuators and devices, and activate or deactivate the corresponding outputs.

8. Discuss the importance of scan cycle time in PLC operation.

Scan cycle time refers to the time taken by a PLC to complete one cycle of scanning inputs, executing control logic, and updating outputs. It determines the responsiveness and performance of the PLC system, with shorter scan times allowing for faster control loop response and higher throughput.

9. Explain the concept of sinking and sourcing inputs/outputs in PLCs.

Sinking inputs/outputs refer to devices that provide a path to ground when activated, while sourcing inputs/outputs refer to devices that provide a source of voltage when activated. Understanding the type of input/output is crucial for proper wiring and interfacing with external devices in a PLC system.

10. Discuss the use of counters in PLC applications.

Counters in PLCs are used to track the number of input events or pulses and perform tasks such as counting products, monitoring machine cycles, or implementing timing functions. They are essential for sequencing operations and controlling processes based on specific count values.

11. Explain the purpose of memory addressing in PLC programming.

Memory addressing allows PLC programmers to access and manipulate data stored in different memory locations within the PLC's memory map. It enables the storage of program instructions, data values, and status information, facilitating efficient program execution and data management.

PART – B

1. (i)What is an operational amplifier (op-amp)?

An operational amplifier, often abbreviated as op-amp, is a type of electronic amplifier with high gain and differential input. It typically has two input terminals, labeled as the inverting (-) and non-inverting (+) inputs, and one output terminal. Op-amps are widely used in analog electronics for various applications due to their versatile and flexible characteristics.

The key features of op-amps include:

1. **High Gain:** Op-amps are designed to have very high voltage gain, often exceeding 100,000. This high gain allows them to amplify very small input signals to a much larger output signal.
2. **Differential Inputs:** Op-amps have two input terminals, and they amplify the voltage difference between these inputs. The output voltage is proportional to this voltage difference.
3. **High Input Impedance:** Op-amps typically have very high input impedance, which means they draw minimal current from the input signal source. This feature prevents loading effects and ensures that the connected circuit behaves as expected.
4. **Low Output Impedance:** Op-amps usually have low output impedance, enabling them to drive loads directly without significant voltage drop.
5. **Linear Operation:** Op-amps are designed to operate linearly within their specified input and output voltage ranges. This linearity ensures that the output signal faithfully reproduces the input signal, scaled by the gain.
6. **Versatility:** Op-amps can be configured in various circuit configurations, such as inverting amplifiers, non-inverting amplifiers, summing amplifiers, integrators, differentiators, and more. This versatility makes them suitable for a wide range of analog signal processing tasks.

(ii)How does an inverting amplifier work?

An inverting amplifier is a basic configuration of an operational amplifier (op-amp) circuit that produces an output voltage that is the opposite polarity of the input voltage. It's called "inverting" because the output signal is inverted or flipped relative to the input signal. Let's break down how it works:

Circuit Configuration:

www.EnggTree.com

The basic inverting amplifier circuit consists of an operational amplifier (op-amp), two resistors, and a power supply. The input signal is applied to the inverting (-) input terminal of the op-amp, while the non-inverting (+) input terminal is typically grounded in this configuration. The feedback resistor (Rf) is connected between the output and the inverting input terminal, and the input resistor (Rin) is connected between the inverting input terminal and the input signal source.

Principle of Operation:

1. **Input Signal:** When an input voltage (Vin) is applied to the inverting input (-) terminal of the op-amp, it produces a corresponding output voltage (Vout).
2. **Negative Feedback:** Due to the negative feedback configuration (via the feedback resistor), the op-amp tries to keep the voltage at its inverting input terminal equal to the voltage at its non-inverting input terminal, which is typically grounded. This is a fundamental property of op-amps known as the virtual short concept.
3. **Virtual Short:** Because of the negative feedback, the inverting input terminal is virtually held at the same voltage as the non-inverting input terminal, which is typically at ground potential (0 volts). As a result, the voltage across the feedback resistor (Rf) is approximately equal to the input voltage (Vin).
4. **Amplification:** The op-amp amplifies this voltage difference between the inverting and non-inverting input terminals according to its gain characteristics. Since the inverting input is connected to the negative terminal of the op-amp, the output voltage will be inverted relative to the input voltage.

2. (i)What is a non-inverting amplifier?

A non-inverting amplifier is another basic configuration of an operational amplifier (op-amp) circuit. Unlike the inverting amplifier, the non-inverting amplifier produces an output voltage that is in the same polarity as the input voltage. In this configuration, the input signal is applied to the non-inverting (+) input terminal of the op-amp, while the inverting (-) input terminal is typically grounded. The feedback resistor is connected between the output and the inverting input terminal, while the input resistor is connected between the non-inverting input terminal and the input signal source.

(ii)Compare and contrast inverting and non-inverting amplifiers.

S.No	Descriptions	Inverting Amplifier	Non Inverting Amplifier
1	**Input-Output Relationship**	In an inverting amplifier, the output voltage is inverted relative to the input voltage.	In a non-inverting amplifier, the output voltage is in phase with the input voltage.
2	**Gain Calculation**	In an inverting amplifier, the gain is determined by the ratio of the feedback resistor to the input resistor, and it is negative.	In a non-inverting amplifier, the gain is determined by the ratio of the feedback resistor to the input resistor, and it is positive.
3	**Input Impedance**	In an inverting amplifier, the input impedance is determined by the input resistor (Rin).	In a non-inverting amplifier, the input impedance is very high, typically dominated by the input impedance of the op-amp itself.
4	**Output Impedance**	In both configurations, the output impedance is typically low due to the low output impedance of the op-amp.	In both configurations, the output impedance is typically low due to the low output impedance of the op-amp.
5	**Phase Relationship**	In an inverting amplifier, the output signal is phase-shifted by 180 degrees compared to the input signal.	In a non-inverting amplifier, the output signal is in phase with the input signal.
6	**Voltage Gain**	In both configurations, the voltage gain can be adjusted by selecting appropriate resistor values. However, the gain is positive in a non-inverting amplifier and negative in an inverting amplifier.	In both configurations, the voltage gain can be adjusted by selecting appropriate resistor values. However, the gain is positive in a non-inverting amplifier and negative in an inverting amplifier.
7	**Applications:**	Inverting amplifiers are commonly used when signal inversion is required, such as in phase shifters or inverting buffers.	Non-inverting amplifiers are often used in applications where a positive gain and phase matching between input and output signals are desired, such as audio amplifiers or voltage followers.

www.EnggTree.com

3. (i)What is a Wheatstone bridge amplifier?

A Wheatstone bridge amplifier is a type of amplifier circuit that utilizes the Wheatstone bridge configuration to measure and amplify small changes in resistance. The Wheatstone bridge is a network of four resistors connected in a diamond shape with a voltage source applied across the two opposite corners. The output voltage is measured across the other two corners. When the resistances in the bridge are balanced, meaning the ratio of resistances on one side of the bridge equals the ratio on the other side, the output voltage is zero.

In a Wheatstone bridge amplifier, the output voltage of the Wheatstone bridge is amplified using an operational amplifier (op-amp). This allows for the amplification of very small changes in resistance, making it suitable for applications such as strain gauge sensors, temperature sensors, and pressure sensors, where the change in resistance due to the physical quantity being measured is typically very small.

(ii)What are the applications of Wheatstone bridge amplifiers?

1) **Strain Gauge Measurement:** Wheatstone bridge amplifiers are commonly used in strain gauge measurement systems. Strain gauges change resistance when subjected to mechanical strain, and by incorporating them into a Wheatstone bridge, the small changes in resistance can be accurately measured and amplified to detect mechanical deformation or stress in structures.
2) **Temperature Sensing:** Wheatstone bridge amplifiers are used in temperature sensing applications with resistive temperature detectors (RTDs) and thermistors. These devices exhibit changes in resistance with changes in temperature, and Wheatstone bridge amplifiers can accurately measure these changes and provide temperature readings.

3) **Pressure Sensors:** Pressure sensors often utilize Wheatstone bridge configurations with piezo resistive elements. When pressure is applied, the resistance of the piezo resistive element changes, and the Wheatstone bridge amplifier can amplify these changes to provide accurate pressure measurements.
4) **Load Cells:** Load cells, used in weighing scales and force measurement systems, employ Wheatstone bridge configurations. The small changes in resistance due to applied loads are amplified by Wheatstone bridge amplifiers to provide precise weight or force measurements.
5) **Gas and Chemical Sensors:** Some gas and chemical sensors operate based on changes in resistance when exposed to specific gases or chemicals. Wheatstone bridge amplifiers can amplify these resistance changes, enabling the detection and measurement of gas concentrations or chemical reactions.

4. (i)What is an instrumentation amplifier?

An instrumentation amplifier is a specialized type of amplifier circuit commonly used in measurement and instrumentation systems to amplify small differential signals with high precision and accuracy. Unlike standard operational amplifiers (op-amps), which are general-purpose amplifiers, instrumentation amplifiers are specifically designed to provide high input impedance, high common-mode rejection ratio (CMRR), and low output impedance, making them well-suited for amplifying signals from sensors and transducers while rejecting common-mode noise.

The key feature of an instrumentation amplifier is its ability to amplify the difference between two input signals while rejecting any common-mode signals that appear equally on both inputs. This makes them ideal for applications where the signal of interest is small compared to unwanted noise or interference.

(ii)How does an instrumentation amplifier differ from a standard operational amplifier?

S.No	Descriptions	Instrumentation Amplifier	Standard operational Amplifier
1	**Purpose:**	Instrumentation amplifiers are designed for amplifying small differential signals with high precision in measurement and instrumentation applications.	Standard operational amplifiers are general-purpose amplifiers used in a wide range of analog circuit applications.
2	**Input Impedance:**	Instrumentation amplifiers typically have very high input impedance, often in the mega ohm range, to minimize loading effects on the input signal source.	Standard operational amplifiers also have high input impedance, but it may not be as high as that of instrumentation amplifiers.
3	**Common-Mode Rejection Ratio (CMRR):**	Instrumentation amplifiers have a high CMRR, which means they can effectively reject common-mode signals present on both input terminals while amplifying the differential signal.	Standard operational amplifiers may have a lower CMRR compared to instrumentation amplifiers, making them less effective in rejecting common-mode noise.
4	**Gain Adjustment:**	Instrumentation amplifiers typically have adjustable gain, allowing the user to select the desired amplification level for the differential signal.	Standard operational amplifiers also have adjustable gain, but they may require external components, such as resistors, to set the gain
5	**Internal Circuitry:**	Instrumentation amplifiers often consist of multiple operational amplifiers and precision resistors arranged in a specific configuration to achieve high performance.	Standard operational amplifiers may contain additional circuitry for features like frequency compensation, input protection, and output buffering.
6	**Noise Performance:**	Instrumentation amplifiers are optimized for low noise performance to ensure accurate signal amplification in measurement applications.	Standard operational amplifiers may have higher noise levels compared to instrumentation amplifiers, although this can vary depending on the specific op-amp model.

5. (i)What are the design considerations for instrumentation amplifiers?

1) **Input Impedance:** High input impedance is crucial to minimize loading effects on the input signal source. This ensures that the instrumentation amplifier does not disturb the signal being measured.
2) **Common-Mode Rejection Ratio (CMRR):** A high CMRR is essential for rejecting common-mode noise present on both input terminals while amplifying the desired differential signal. This helps maintain signal integrity and accuracy.
3) **Gain Accuracy:** The gain of the instrumentation amplifier should be accurately controlled to ensure precise amplification of the differential signal. Tight gain tolerance and stability over temperature variations are desirable.
4) **Noise Performance:** Low noise is critical for instrumentation amplifiers, especially in applications where small signals need to be amplified with high accuracy. Both input-referred noise and output noise should be minimized.
5) **Bandwidth:** The bandwidth of the instrumentation amplifier should be sufficient to accommodate the frequency range of the input signal without distortion or phase shift.
6) **Power Supply Rejection Ratio (PSRR):** High PSRR helps in rejecting variations in the power supply voltage, which can introduce noise and affect the performance of the instrumentation amplifier.
7) **Temperature Stability:** The performance of the instrumentation amplifier should be stable over a wide temperature range to ensure accurate measurements in different operating conditions.
8) **Input Protection:** Input protection circuitry should be included to prevent damage to the amplifier from overvoltage or reverse polarity conditions.

(ii)How do you analyze the performance of op-amp circuits in practical scenarios?

Analyzing the performance of op-amp circuits in practical scenarios involves several steps:

1. **Ideal Analysis:** Begin by analyzing the circuit under ideal conditions, assuming ideal op-amp characteristics such as infinite input impedance, infinite gain, zero input bias current, and zero output impedance.
2. **Non-Ideal Considerations:** Account for non-ideal characteristics of the op-amp, such as finite gain, input offset voltage, input bias current, and finite bandwidth. These factors can significantly affect circuit performance.
3. **DC Analysis:** Analyze the circuit's DC operating point to determine voltages and currents at various nodes. Consider input offset voltage and input bias currents in the analysis.
4. **AC Analysis:** Perform AC analysis to determine the frequency response of the circuit, including gain, bandwidth, and phase shift. Consider the effect of finite bandwidth and input capacitance on the frequency response.
5. **Stability Analysis:** Check for stability issues such as oscillation or ringing by analyzing the phase margin and gain margin of the feedback loop. Ensure proper compensation techniques are employed if necessary.
6. **Noise Analysis:** Analyze the noise performance of the circuit, including input-referred noise and output noise. Consider noise sources such as thermal noise, shot noise, and flicker noise.
7. **Sensitivity Analysis:** Perform sensitivity analysis to determine how variations in component values, temperature, and power supply voltages affect circuit performance.

(iii)What is a PID controller, and how does it work?

A PID controller is a type of feedback control system commonly used in industrial control applications to regulate the output of a system to a desired set point. PID stands for Proportional, Integral, and Derivative, which are the three components of the controller.

Proportional (P) Term: The proportional term produces an output proportional to the current error (the difference between the desired set point and the actual output). It provides a fast response but may result in steady-state error if used alone.

Integral (I) Term: The integral term integrates the error over time and produces an output proportional to the accumulated error. It eliminates steady-state error but may introduce oscillations if too aggressive.

Derivative (D) Term: The derivative term predicts the future trend of the error by considering its rate of change. It helps in damping oscillations and improving stability but may amplify noise if too sensitive.

The output of the PID controller is the sum of these three terms, each multiplied by a respective gain factor. By adjusting these gain factors, the controller's response can be tuned to achieve desired performance in terms of speed, stability, and accuracy.
PID controllers are widely used in various industrial processes, including temperature control, speed control, level control, and position control, due to their simplicity, effectiveness, and versatility in a wide range of applications.

6. (i)What are protection circuits, and why are they important in electronic systems?

Protection circuits are electronic circuits designed to safeguard electronic components, circuits, and systems from damage caused by abnormal operating conditions, such as overvoltage, overcurrent, reverse polarity, short circuits, and temperature extremes. They are essential in electronic systems to ensure reliability, longevity, and safety by preventing catastrophic failures due to fault conditions.

(ii)Define protection circuits and their role in safeguarding electronic components from overvoltage, overcurrent, and other fault conditions.

Protection circuits are designed to detect abnormal conditions and take appropriate actions to mitigate potential damage to electronic components. Their primary role is to monitor key parameters such as voltage, current, and temperature and intervene when these parameters exceed safe operating limits. By quickly responding to fault conditions, protection circuits help prevent damage to sensitive components, minimize downtime, and improve system reliability.
Protection circuits typically incorporate sensing elements, such as voltage regulators, current sensors, temperature sensors, and comparators, along with control elements, such as switches, relays, and electronic switches (e.g., MOSFETs), to implement protective actions. These actions may include disconnecting the faulty circuit, limiting current flow, reducing voltage levels, or activating warning indicators to alert users.

(iii)Discuss different types of protection circuits, such as overvoltage protection (OVP), overcurrent protection (OCP), and reverse polarity protection.

1) **Overvoltage Protection (OVP):**

www.EngoTree.com

Overvoltage protection circuits monitor the input voltage and take action when it exceeds a predetermined threshold. They can be implemented using voltage clamping devices like Zener diodes, transient voltage suppressors (TVS diodes), or voltage limiters. When an overvoltage condition is detected, these devices shunt excess voltage to ground, preventing it from reaching sensitive components.

2) **Overcurrent Protection (OCP):**

Overcurrent protection circuits monitor the current flow through a circuit and respond when it exceeds a specified threshold. They can employ current-limiting devices such as fuses, circuit breakers, or current-sensing resistors in conjunction with electronic control circuitry. When an overcurrent condition is detected, these devices interrupt the current flow, preventing damage to the circuit and components.

3) **Reverse Polarity Protection:**

Reverse polarity protection circuits prevent damage caused by connecting power sources or loads with reversed polarity. They typically use diodes or MOSFETs configured to block current flow in the reverse direction. By preventing reverse current flow, these circuits protect sensitive components from damage due to incorrect polarity connections.

4) **Temperature Protection:**

Temperature protection circuits monitor the temperature of electronic components or the ambient environment and activate protective measures when temperatures exceed safe limits. They can include thermal shutdown devices, such as thermal fuses, temperature sensors, or thermal shutdown circuits integrated into semiconductor devices. When temperatures rise above a certain threshold, these devices cut off power or reduce current flow to prevent overheating and component damage.

5) **Short Circuit Protection:**

Short circuit protection circuits detect and respond to short circuits in a circuit by limiting the current flow or disconnecting the circuit altogether. They may use current-limiting resistors, electronic switches, or dedicated short-circuit protection ICs to detect excessive current flow and trigger protective actions, such as opening a relay or shutting down the circuit.

7. How do filtering circuits work, and what are their applications?

How Filtering Circuits Work:

1. **Frequency Selectivity:** Filtering circuits utilize passive components like resistors, capacitors, and inductors, or active components like operational amplifiers, to create frequency-dependent impedance networks. These networks selectively attenuate or pass certain frequencies based on their impedance characteristics.
2. **Passive Filters:** Passive filters, such as RC (resistor-capacitor) filters and LC (inductor-capacitor) filters, rely on the frequency-dependent properties of their constituent components to attenuate or pass certain frequencies. RC filters, for example, attenuate higher frequencies, while LC filters can pass or reject specific frequencies based on the resonance frequency of the LC network.
3. **Active Filters:** Active filters employ active components like operational amplifiers to achieve frequency-selective filtering. They offer advantages such as gain, adjustable cutoff frequencies, and improved performance compared to passive filters. Common types of active filters include low-pass, high-pass, band-pass, and band-stop filters.
4. **Digital Filters:** Digital filters process signals in the digital domain using algorithms implemented in digital signal processors (DSPs) or microcontrollers. They offer precise control over filter characteristics, such as cut off frequency and filter order, and are widely used in applications like audio processing, digital communications, and image processing.

Applications of Filtering Circuits:

1. **Audio Processing:** Filtering circuits are used in audio systems for equalization, tone control, noise reduction, and crossover networks to separate different frequency bands for speakers and subwoofers.
2. **Communication Systems:** In communication systems, filtering circuits are employed to extract or reject specific frequency components in modulated signals, demodulation, channel equalization, and spectrum shaping.
3. **Power Supplies:** Filtering circuits are integrated into power supplies to remove ripple and noise from the output voltage, ensuring a stable and clean DC power supply for electronic devices.
4. **Instrumentation:** Filtering circuits are used in instrumentation and measurement systems to remove unwanted noise and interference from sensor signals, improving the accuracy and reliability of measurements.
5. **Biomedical Applications:** Filtering circuits play a crucial role in biomedical devices for signal conditioning and noise reduction in physiological signals like electrocardiograms (ECGs), electroencephalograms (EEGs), and electromyograms (EMGs).
6. **Radio Frequency (RF) Systems:** Filtering circuits are utilized in RF systems for frequency selection, image rejection, harmonic suppression, and interference rejection in wireless communication, radar systems, and RF amplifiers.

www.EasyTechJob.com

8. (i)What is a multiplexer, and how does it function?

A multiplexer (often abbreviated as "mux") is a digital electronic device that selects one of several input signals and forwards it to a single output line. It functions as a data selector or switch, allowing multiple input lines to be connected to a single output line based on a control signal.

(ii)Define multiplexers and their role in combining multiple analog or digital signals into a single output.

How a Multiplexer Functions:

1. **Input Selection:** A multiplexer has multiple input lines, usually denoted as D0,D1,D2,…,Dn−1D_0, D_1, D_2, \ldots, D_{n-1}D0,D1,D2,…,Dn−1, where nnn is the number of input lines. These input lines carry different digital or analog signals that need to be multiplexed.
2. **Control Signal:** The multiplexer also has control inputs, typically denoted as S0,S1,…,Sm−1S_0, S_1, \ldots, S_{m-1}S0,S1,…,Sm−1, where mmm is the number of control inputs. These control inputs determine which input line is connected to the output.
3. **Selection Logic:** The control inputs are binary signals that select one of the 2m2^m2m possible input combinations. Each combination corresponds to a specific input line being connected to the output. The selection logic inside the multiplexer interprets the control inputs and activates the corresponding input line.
4. **Output:** The selected input signal is forwarded to the output line of the multiplexer.

5. **Timing:** The selection of input lines typically occurs synchronously with a clock signal to ensure proper synchronization of data.

Example:
For example, in a 4-to-1 multiplexer, there are four input lines (D0, D1, D2, D3) and two control inputs (S0, S1). The control inputs can select one of the four input lines to be connected to the output. If, for instance, S0 and S1 are both 0, then the output will be the signal from input line D0. If S0 is 1 and S1 is 0, then the output will be the signal from input line D1, and so on.

(ii) **Definition of Multiplexers and Their Role in Combining Multiple Signals:**
Multiplexers are digital devices used to combine multiple analog or digital signals into a single output. They play a crucial role in communication systems, data acquisition systems, and digital circuitry by enabling the transmission of multiple signals over a shared medium or interface.

Role of Multiplexers:

1. **Data Selection:** Multiplexers allow one of several input signals to be selected and transmitted to a common output line based on control inputs. This enables efficient utilization of communication channels or data paths.
2. **Resource Sharing:** Multiplexers facilitate resource sharing by allowing multiple devices to share a common communication channel or data bus. This reduces the number of physical connections required and conserves resources.
3. **Signal Routing:** Multiplexers route signals from multiple sources to a common destination, enabling centralized processing or monitoring of data streams.
4. **Data Transmission:** In telecommunications and networking, multiplexers are used to combine multiple data streams into a single transmission line for efficient data transfer over long distances.
5. **Analog Signal Multiplexing:** Analog multiplexers are used in instrumentation and measurement systems to switch between multiple sensors or measurement sources, enabling sequential sampling and data acquisition.

9. What are the main components of a data acquisition system (DAS)?

www.Free-Tree.com

A data acquisition system (DAS) typically consists of several key components:

1. **Sensors/Transducers:** Sensors or transducers are devices that convert physical or electrical quantities into measurable electrical signals, such as voltage, current, resistance, or frequency. They serve as the interface between the physical world and the data acquisition system.
2. **Signal Conditioning Circuitry:** Signal conditioning circuits process and prepare the raw electrical signals from sensors for accurate measurement by the data acquisition hardware. This may involve amplification, filtering, isolation, linearization, and digitization of signals.
3. **Data Acquisition Hardware:** The data acquisition hardware includes analog-to-digital converters (ADCs) for digitizing analog signals, digital input/output (I/O) channels for interfacing with external devices, multiplexers for selecting multiple input signals, and timing circuits for synchronization and triggering.
4. **Data Processing Unit:** The data processing unit consists of a microcontroller, microprocessor, or dedicated digital signal processor (DSP) that controls the operation of the data acquisition system, performs signal processing tasks, and manages data storage and communication.
5. **Memory:** Memory components, such as RAM (random access memory) and non-volatile storage (e.g., flash memory), are used for temporary storage of sampled data, buffering, and long-term storage of acquired data.
6. **Software Interface:** Software applications provide a user-friendly interface for configuring the data acquisition system, setting up measurement parameters, visualizing acquired data in real-time or post-processing, and exporting data for further analysis.
7. **Power Supply:** A stable and reliable power supply is essential to power the various components of the data acquisition system, ensuring accurate and consistent operation.

10. What factors should be considered when designing a data acquisition system?

When designing a data acquisition system, several factors need to be considered to ensure its effectiveness, reliability, and suitability for the intended application:

1. **Sampling Rate and Resolution:** The required sampling rate and resolution determine the accuracy and fidelity of the acquired data, considering the bandwidth and dynamic range of the signals being measured.
2. **Signal Conditioning Requirements:** Understand the characteristics of the input signals and design appropriate signal conditioning circuits to amplify, filter, linearize, and isolate the signals for accurate measurement.
3. **Sensor Selection:** Choose sensors or transducers that are suitable for the measured quantities, environment, and operating conditions of the application, considering factors such as sensitivity, accuracy, range, and compatibility with the data acquisition system.
4. **Input/Output Channels:** Determine the number and types of input and output channels needed to interface with sensors, actuators, and external devices, ensuring compatibility and flexibility for future expansion.
5. **Timing and Synchronization:** Consider the timing requirements and synchronization mechanisms necessary for coordinating multiple data acquisition channels, triggering events, and ensuring temporal alignment of acquired data.
6. **Data Storage and Transfer:** Select appropriate memory and data storage options for buffering, recording, and transferring acquired data, considering factors such as capacity, speed, reliability, and compatibility with data analysis tools.
7. **Power Supply and Environmental Considerations:** Design a robust power supply system to provide stable and reliable power to the data acquisition system, taking into account environmental factors such as temperature, humidity, vibration, and electromagnetic interference (EMI).
8. **Software and User Interface:** Develop user-friendly software applications for configuring the data acquisition system, visualizing acquired data, performing real-time analysis, and exporting data for further processing and analysis.

www.EasyTrick.com

11. What are the emerging trends and advancements in data acquisition technology?

Some emerging trends and advancements in data acquisition technology include:

1. **Integration of Wireless Connectivity:** The integration of wireless communication protocols, such as Wi-Fi, Bluetooth, and cellular, enables remote monitoring and control of data acquisition systems, enhancing flexibility and accessibility.
2. **Internet of Things (IoT) Integration:** Data acquisition systems are increasingly being integrated into IoT platforms, allowing seamless integration with cloud-based services, data analytics, and machine learning algorithms for real-time monitoring and predictive maintenance applications.
3. **Edge Computing and Edge Analytics:** Data acquisition systems with built-in processing capabilities enable edge computing and edge analytics, allowing data processing and analysis to be performed closer to the source of data generation, reducing latency and bandwidth requirements.
4. **High-Speed and High-Resolution ADCs:** Advancements in analog-to-digital converter (ADC) technology enable higher sampling rates, resolutions, and dynamic ranges, allowing for more accurate and detailed measurements of fast-changing signals and fine-grained data.
5. **Software-Defined Data Acquisition (SDDA):** Software-defined data acquisition platforms offer flexibility and reconfigurability through programmable software-defined hardware, allowing users to adapt the data acquisition system to different measurement tasks and application requirements dynamically.
6. **Machine Learning and Artificial Intelligence:** Integration of machine learning algorithms and artificial intelligence techniques into data acquisition systems enables intelligent data processing, anomaly detection, predictive analytics, and adaptive control in real-time applications.
7. **Energy-Efficient and Low-Power Designs:** Energy-efficient and low-power design techniques help minimize power consumption and extend battery life in portable and remote data acquisition systems, enabling long-term autonomous operation in energy-constrained environments.

PART – C

1. What is a Programmable Logic Controller (PLC), and what are its main components?

A Programmable Logic Controller (PLC) is a specialized industrial computer used for controlling and automating electromechanical processes in manufacturing plants, industrial facilities, and other applications. PLCs are designed to perform real-time control tasks such as monitoring inputs, executing logic, and controlling outputs based on programmed instructions. They provide a reliable and flexible solution for process automation, replacing traditional relay-based control systems with a more efficient and versatile digital control platform.

Main Components of a PLC:

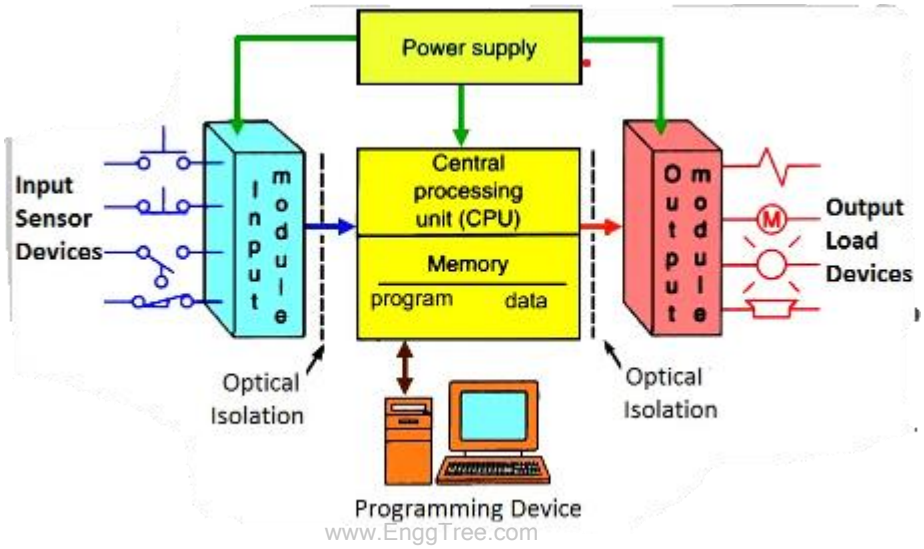

1. **Central Processing Unit (CPU):** The CPU is the core component of the PLC responsible for executing control logic, handling input/output (I/O) processing, and communicating with other devices. It consists of a microprocessor, memory (RAM and ROM), and firmware/software for running user-defined programs.
2. **Input Modules:** Input modules interface with external sensors, switches, and devices to detect and convert analog or digital signals into a format that the PLC can process. They provide isolation, filtering, and signal conditioning to protect the PLC from electrical noise and interference.
3. **Output Modules:** Output modules interface with actuators, relays, motors, valves, and other output devices to control industrial processes. They convert control signals from the PLC into analog or digital outputs to drive external devices.
4. **Power Supply:** The power supply provides the necessary electrical power to operate the PLC and its components. It converts the incoming AC or DC power supply voltage to the required voltage levels for the PLC's internal circuitry and external devices.
5. **Programming Device/Software:** PLCs are programmed using specialized programming software installed on a programming device, such as a personal computer (PC) or handheld programming device. The software allows users to create, edit, download, and debug control logic programs using programming languages such as ladder logic, function block diagrams (FBD), or structured text (ST).
6. **Communication Ports/Interfaces:** PLCs feature communication ports/interfaces for connecting to other devices, networks, and systems. Common communication protocols include Ethernet, serial (RS-232/RS-485), Profibus, Modbus, DeviceNet, and CANopen, enabling integration with supervisory control and data acquisition (SCADA) systems, human-machine interfaces (HMIs), and other industrial automation devices.
7. **Memory Modules:** PLCs may include memory expansion modules for storing larger control programs, historical data, configuration settings, and firmware updates. Memory modules can be in the form of RAM, ROM, EEPROM, or flash memory, depending on the PLC model and requirements.
8. **User Interface:** Some PLCs feature built-in operator interfaces or display panels for viewing system status, diagnostics, alarms, and messages. Operator interfaces may include touchscreens, keypads, LEDs, and LCDs for user interaction and system monitoring.

2. Explain the input/output processing mechanism in a PLC.

The input/output (I/O) processing mechanism in a PLC is responsible for interfacing with external devices, such as sensors, switches, actuators, and other field devices, to monitor inputs and control outputs based on programmed logic. This process involves several stages, including scanning, input processing, program execution, and output processing. Here's how it works:

1. Scanning:

The PLC continuously scans its I/O modules to read the state of input signals and update the status of output signals. The scanning process typically follows a cyclical pattern, with each cycle consisting of several steps.

2. Input Processing:

During the input processing phase, the PLC reads the status of input signals from its input modules. Input modules interface with external devices and convert analog or digital signals into a format that the PLC can process. The PLC reads the state of input signals and stores them in memory for further processing.

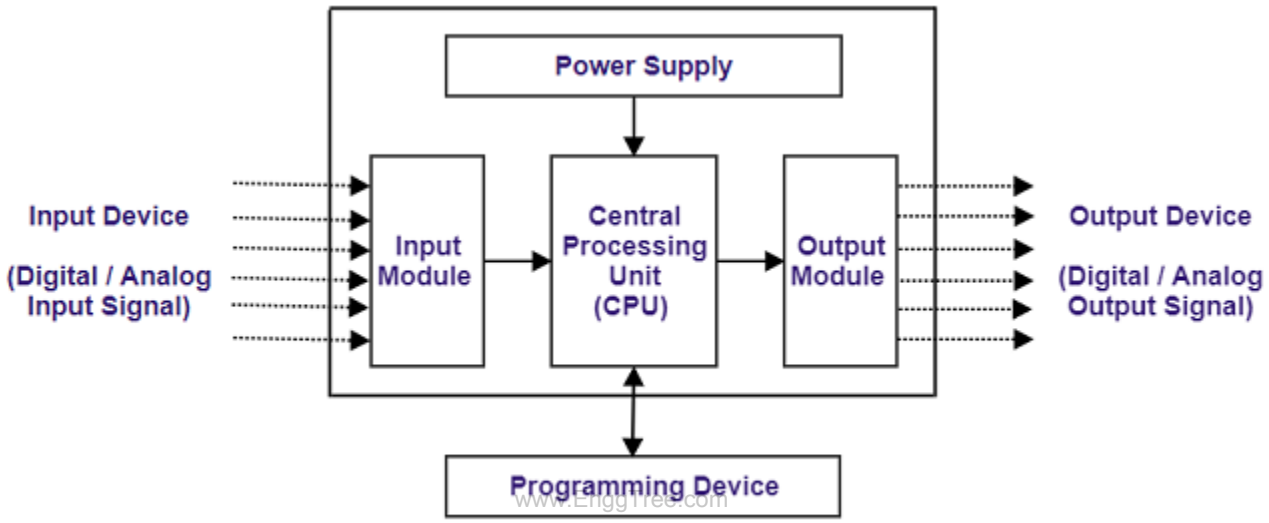

Block Diagram of PLC Input and Output Modules

DipsLab.com

3. Program Execution:

Once the input signals are read and stored in memory, the PLC executes the user-defined control logic program stored in its memory. The control program consists of a series of instructions written in a programming language such as ladder logic, function block diagrams (FBD), or structured text (ST). These instructions define the logic for processing input signals, performing calculations, making decisions, and controlling output signals.

4. Output Processing:

After executing the control program, the PLC updates the status of output signals based on the programmed logic and the current state of input signals. Output modules interface with external devices and convert control signals from the PLC into analog or digital outputs to drive actuators, motors, valves, and other output devices. The PLC sends commands to the output modules to set the desired state of output signals, such as turning on/off a motor or opening/closing a valve.

5. Feedback and Diagnostics:

During the scanning process, the PLC may also perform diagnostics and error checking to detect faults, failures, or abnormal conditions in the system. It may monitor feedback signals from output devices to verify that they have responded correctly to control commands. If any faults or errors are detected, the PLC may generate alarms, notifications, or shutdown commands to ensure safe operation of the system.

UNIT – III
FUNDAMENTALS OF IoT AND EMBEDDED SYSTEMS
PART – A

1. Define IoT and explain its significance in the modern world.

Definition of IoT:

IoT, or the Internet of Things, refers to a network of interconnected devices embedded with sensors, actuators, and other technologies that enable them to collect, exchange, and act upon data without human intervention. These devices communicate with each other and with centralized systems via the internet, allowing for remote monitoring, control, and automation of various processes and environments.

Significance of IoT:

The significance of IoT in the modern world lies in its ability to revolutionize industries, enhance efficiency, improve productivity, and enable new applications and services. IoT technology facilitates smart homes, smart cities, industrial automation, healthcare monitoring, environmental monitoring, agriculture optimization, and more, leading to greater convenience, sustainability, and economic growth.

2. What are the key components of an IoT system?

Key Components of an IoT System:

(i) **Sensors and Actuators:** Devices that collect data from the physical environment (sensors) and act upon it (actuators).

(ii) **Connectivity:** Technologies that enable communication between devices, such as Wi-Fi, Bluetooth, ZigBee, and cellular networks.

(iii) **Data Processing:** Systems for processing and analyzing the collected data, including edge computing devices, cloud platforms, and analytics software.

(iv) **User Interface:** Interfaces for users to interact with IoT systems, such as mobile apps, web portals, and dashboards.

(v) **Security:** Measures to protect IoT systems from unauthorized access, data breaches, and cyber-attacks, including encryption, authentication, and access control mechanisms.

3. Discuss the role of sensors in an IoT ecosystem.

(i) Sensors are fundamental components of an IoT ecosystem, as they enable devices to collect data from the physical environment.

(ii) Sensors detect various environmental parameters such as temperature, humidity, pressure, motion, light, sound, and chemical composition.

(iii) The data collected by sensors is transmitted to IoT devices, where it is processed, analyzed, and used to make informed decisions or trigger actions.

4. Explain the concept of connectivity in IoT.

(i) Connectivity in IoT refers to the ability of devices to communicate with each other and with external systems over networks such as the internet.

(ii) Connectivity enables data exchange, remote monitoring, control, and management of IoT devices and systems.

(iii) Various wireless and wired communication technologies are used for IoT connectivity, including Wi-Fi, Bluetooth, ZigBee, Lora WAN, cellular networks (3G, 4G, 5G), and Ethernet.

5. Differentiate between IoT and traditional Internet.

(i) IoT extends the capabilities of the traditional internet by connecting not only computers and servers but also everyday objects and devices, enabling them to communicate and interact with each other.

(ii) While the traditional internet focuses on human-to-human and human-to-machine communication, IoT facilitates machine-to-machine (M2M) communication and automation of processes without human intervention.

(iii) IoT systems involve a wide range of devices with diverse capabilities and constraints, requiring specialized protocols, architectures, and security measures compared to the traditional internet.

6. Define embedded system and provide examples of where they are commonly used.

Embedded system:

An embedded system is a computing device designed for a specific purpose or function within a larger system, typically with limited resources, and often embedded within a larger electromechanical system.

Examples of embedded systems include:

1. Consumer electronics: Smartphones, digital cameras, wearable devices.
2. Automotive systems: Engine control units (ECUs), infotainment systems, navigation systems.
3. Industrial automation: Programmable logic controllers (PLCs), supervisory control and data acquisition (SCADA) systems, industrial robots.
4. Home appliances: Washing machines, refrigerators, thermostats.
5. Medical devices: Heart rate monitors, insulin pumps, infusion pumps.

7. Discuss the importance of real-time operating systems (RTOS) in embedded systems.

(i) RTOS is essential in embedded systems that require deterministic behaviour and real-time response to events.

(ii) RTOS provides features such as task scheduling, interrupt handling, memory management, and inter-task communication to ensure timely execution of critical tasks.

(iii) RTOS helps meet timing constraints, reduce latency, improve system reliability, and simplify development of complex embedded systems.

8. Explain the difference between microcontroller and microprocessor in the context of embedded systems.

(i) Microcontroller: Integrated circuit (IC) containing a CPU, memory, I/O ports, and peripherals on a single chip. Designed for embedded applications with specific tasks and limited resources.

(ii) Microprocessor: Central processing unit (CPU) chip that executes instructions and processes data. Requires external components (memory, I/O devices) to function as a complete system. Used in general-purpose computing devices such as computers and smartphones.

9. Describe the role of sensors and actuators in an embedded system.

www.EmpoTree.com

Sensors: Collect data from the physical environment, such as temperature, pressure, motion, and light. Provide input to the embedded system for monitoring and control purposes.

Actuators: Receive commands from the embedded system and perform physical actions in the environment, such as moving motors, opening valves, or switching on lights. Enable the embedded system to interact with and affect the external world.

10. What is firmware, and how does it relate to embedded systems?

Firmware: Firmware is software that is embedded into hardware devices, typically stored in non-volatile memory (e.g., ROM or flash memory). It provides the low-level control and operational code required for the device to function.

In embedded systems, firmware plays a crucial role in controlling.

PART – B

1. What is the Internet of Things (IoT), and how does it differ from traditional Internet-connected devices?

The Internet of Things (IoT) refers to the network of interconnected devices that can communicate and exchange data with each other over the internet without human intervention. These devices can range from everyday objects such as home appliances, wearables, and vehicles to industrial machinery and infrastructure components.

The key difference between IoT devices and traditional Internet-connected devices lies in their ability to collect and exchange data autonomously. While traditional internet-connected devices typically require human interaction to operate and exchange data, IoT devices are designed to gather data from their surroundings using sensors and actuators, analyze it, and then communicate with other devices or systems to trigger actions or provide insights.

Another distinction is the scale and scope of connectivity. IoT devices are often part of large-scale networks that can span across various environments, such as smart cities, industrial facilities, or agricultural fields. These networks enable seamless communication and coordination between devices, leading to improved efficiency, automation, and decision-making

2. Describe the architecture of an IoT system and its components.

An IoT (Internet of Things) system typically consists of several interconnected components that work together to gather, transmit, process, and act upon data from the physical world. Here's a breakdown of the architecture and its components:

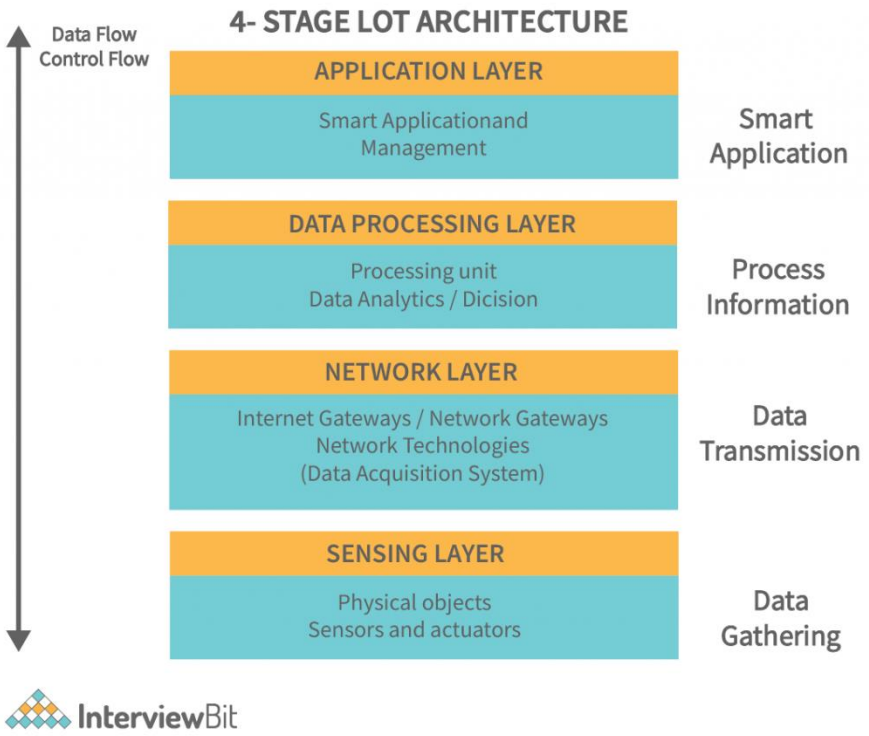

1. **Sensing Stage**: This is the initial stage where data is collected from the physical environment using sensors or devices. These sensors could be temperature sensors, motion sensors, cameras, GPS devices, etc. They capture various types of data such as temperature, humidity, pressure, location, movement, etc. This stage involves deploying sensors strategically to gather relevant data efficiently.
2. **Connectivity Stage**: Once the data is captured by sensors, it needs to be transmitted to the central processing system or the cloud. This stage involves establishing connectivity between the sensors/devices and the central system. Connectivity options include wired (Ethernet, Powerline) or wireless (Wi-Fi, Bluetooth, Zigbee, Cellular, LoRaWAN). The choice of connectivity depends on factors like range, power consumption, bandwidth, and data rate.
3. **Processing and Analysis Stage**: In this stage, the data collected from sensors is processed and analyzed to derive meaningful insights. This can happen at different levels - at the edge (on devices or gateways), in the cloud, or both. Processing may involve filtering out noise, aggregating data, performing real-time analytics, running machine learning algorithms, and detecting patterns or anomalies in the data. The goal is to extract valuable information from raw sensor data that can be used for decision-making.
4. **Action and Control Stage**: Based on the insights generated from data analysis, actions are taken to control or influence the physical environment. This could involve triggering actuators to perform specific tasks, sending alerts or notifications to users, adjusting settings remotely, or even autonomously making decisions based on predefined rules or machine learning models. The action and control stage completes the feedback loop in the IoT system, where data-driven insights lead to actions that affect the physical world, and the outcomes of these actions are monitored and fed back into the system for further optimization.

These four stages together form the foundation of an IoT architecture, enabling the seamless integration of physical devices, connectivity, data processing, and intelligent decision-making to create innovative solutions for various industries and applications.

3. Discuss the various layers in an IoT framework (e.g., perception layer, network layer, application layer) and their functionalities.

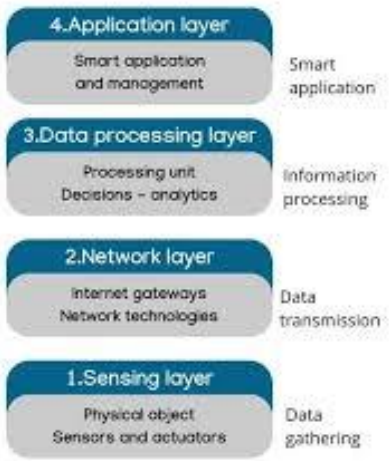

(i) **Perception Layer (Sensing Layer)**:

- This layer is at the very edge of the IoT architecture, where physical devices or sensors are deployed to collect data from the environment.
- Sensors measure various parameters such as temperature, humidity, pressure, light, motion, etc.
- The data collected here is often raw and unprocessed.

(ii) **Network Layer**:

- The network layer is responsible for facilitating communication between the perception layer (sensors) and the rest of the IoT architecture.
- It includes protocols and technologies such as Wi-Fi, Bluetooth, Zigbee, LoRa, cellular networks, etc., depending on the specific requirements of the IoT deployment.
- This layer may involve gateways or edge devices that aggregate data from multiple sensors before transmitting it to the next layer.

www.EnggTree.com

(iii) **Middleware Layer (Processing Layer)**:

- This layer is responsible for processing and managing the data received from the perception layer.
- It may involve data filtering, aggregation, normalization, and transformation to make the data suitable for further analysis.
- Edge computing may also be performed at this layer to enable real-time processing and decision-making closer to the data source.

(iv) **Application Layer**:

- The application layer is where the processed data is utilized to derive insights, make decisions, and trigger actions.
- It includes applications and services that leverage the data to provide value to users or other systems.
- Examples include monitoring and control applications, predictive maintenance systems, asset tracking solutions, etc.

(v) **Business Layer**:

- This layer involves the business logic and processes that govern the operation of the IoT system.
- It includes aspects such as user management, access control, billing, and integration with other enterprise systems.
- The business layer ensures that the IoT deployment aligns with the strategic objectives and requirements of the organization.

(vi) **Security and Privacy Layer**:

- Security is a critical aspect of any IoT framework, especially considering the large number of interconnected devices and the sensitive nature of the data they collect.
- This layer involves mechanisms for authentication, authorization, encryption, secure bootstrapping, and secure communication to protect against various threats such as unauthorized access, data breaches, and tampering.
- Privacy considerations, such as data anonymization and consent management, are also addressed in this layer to ensure compliance with regulations and protect the privacy rights of individuals

4. Discuss the role of sensors and actuators in IoT systems and their types.

Sensors and actuators play crucial roles in IoT systems by enabling them to interact with the physical world, collect data, and perform actions based on that data. Here's an overview of their roles and types:

1. Sensors:

Role:

1. Sensors are devices that detect and measure physical properties or changes in the environment.
2. They act as the input devices of an IoT system, converting physical phenomena into electrical signals that can be processed by electronic devices.

Types of Sensors:

1. **Temperature Sensors:** Measure temperature variations in the environment.
2. **Humidity Sensors:** Measure humidity levels in the air.
3. **Pressure Sensors:** Measure pressure variations in gases or liquids.
4. **Proximity Sensors:** Detect the presence or absence of nearby objects without physical contact.
5. **Accelerometers:** Measure acceleration forces, enabling detection of motion, tilt, and vibration.
6. **Gyroscopes:** Measure orientation and angular velocity, useful in motion tracking and navigation.
7. **Light Sensors:** Measure ambient light levels.
8. **IR (Infrared) Sensors:** Detect infrared radiation, commonly used in motion detection and temperature measurement.
9. **Gas Sensors:** Detect the presence and concentration of gases in the environment, such as carbon monoxide, methane, etc.
10. **Biometric Sensors:** Measure physiological characteristics of living organisms, such as fingerprints, heart rate, etc.

2. Actuators:

Role:

1. Actuators are devices that take electrical signals from the IoT system and convert them into physical actions or outputs.
2. They enable IoT systems to control and manipulate physical objects or systems based on the data collected by sensors.

www.EnggTree.com

Types of Actuators:

1. **Electric Motors:** Convert electrical energy into mechanical motion, used in various applications like robotics, automotive systems, etc.
2. **Solenoids:** Electromechanical devices that create linear motion by converting electrical energy into magnetic force.
3. **Valves:** Control the flow of fluids or gases in a system.
4. **Relays:** Electromechanical switches that control the flow of electricity in a circuit.
5. **LEDs (Light Emitting Diodes):** Emit light when electric current passes through them, used for indicators, displays, and lighting control.
6. **Piezoelectric Actuators:** Generate mechanical motion in response to electrical signals by exploiting the piezoelectric effect, used in precision positioning, ultrasonic devices, etc.
7. **Pumps:** Generate fluid flow or pressure in a system.
8. **Hydraulic Actuators:** Use hydraulic pressure to create linear or rotary motion, commonly found in heavy machinery, industrial equipment, etc.

5. What are the key steps involved in the implementation of an IoT project?

Implementing an IoT project involves several key steps to ensure its success. Here's a structured approach to the implementation process:

1. **Define Project Objectives and Scope:**
   - Clearly define the goals and objectives of the IoT project.
   - Identify the problem or opportunity that the IoT solution will address.
   - Determine the scope of the project, including the devices to be connected, data to be collected, and actions to be taken.
2. **Conduct Feasibility Study:**
   - Assess the technical, economic, and operational feasibility of the project.
   - Evaluate the available technologies, resources, and expertise required for implementation.
   - Identify potential challenges and risks and develop mitigation strategies.

3. **Select Hardware and Software Components:**
    - Choose the appropriate sensors, actuators, and other hardware components based on the project requirements.
    - Select the software platforms, protocols, and development tools necessary for building the IoT solution.
    - Consider factors such as scalability, interoperability, security, and cost-effectiveness when making hardware and software decisions.
4. **Design System Architecture:**
    - Develop a high-level architecture that outlines the components, modules, and interactions of the IoT system.
    - Define the communication protocols, data flow, and integration points between different layers of the architecture.
    - Consider factors such as data storage, processing, analytics, and user interface design during system design.
5. **Develop and Test Prototypes:**
    - Build prototypes or proof-of-concept implementations to validate the design and functionality of the IoT system.
    - Develop firmware for embedded devices, backend software for data processing and analysis, and user interfaces for monitoring and control.
    - Conduct thorough testing and debugging to ensure that the system meets the requirements and performs reliably under different conditions.
6. **Deploy and Integrate:**
    - Deploy the IoT solution in the target environment, including installing hardware devices, configuring software components, and integrating with existing systems.
    - Ensure proper connectivity and communication between devices, networks, and applications.
    - Conduct pilot tests or small-scale deployments to validate the solution before full-scale implementation.
7. **Monitor and Maintain:**
    - Implement monitoring and management tools to continuously monitor the performance, health, and security of the IoT system.
    - Collect and analyze data to identify potential issues, optimize system performance, and make informed decisions.
    - Establish regular maintenance procedures to address hardware failures, software updates, security patches, and other maintenance tasks.
8. **Scale and Iterate:**
    - Scale up the IoT solution as needed to accommodate growing data volumes, user demands, and business requirements.
    - Iterate on the design and implementation based on user feedback, changing market conditions, and technological advancements.
    - Continuously improve the IoT solution to enhance its functionality, efficiency, and value proposition over time

www.EasyEngineering.net

PART – C

1. **What is an embedded system, and what distinguishes it from general-purpose computing systems?**

An embedded system is a specialized computing system designed to perform specific functions within a larger system or device. It is typically built around a microcontroller or microprocessor and is tightly integrated into the hardware it controls. Embedded systems are commonly found in a wide range of devices and applications, including consumer electronics, industrial machinery, automotive systems, medical devices, and IoT devices.

Here are some key characteristics that distinguish embedded systems from general-purpose computing systems:

1. **Purpose-Built Functionality:**
    - Embedded systems are designed to perform dedicated functions or tasks, often in real-time or with specific timing requirements.
    - They are optimized for efficiency, reliability, and performance in executing the intended tasks, rather than providing general-purpose computing capabilities.

2. **Resource Constraints:**
   - Embedded systems typically operate under resource constraints, including limitations on processing power, memory, storage, and energy consumption.
   - They are engineered to achieve the desired functionality within these constraints, often requiring careful optimization of software algorithms and hardware designs.
3. **Single-Purpose or Fixed-Function:**
   - Embedded systems are often single-purpose or fixed-function devices tailored to specific applications or use cases.
   - They are not designed to support a wide range of software applications or user interactions like general-purpose computing systems such as PCs or smartphones.
4. **Integration with Hardware:**
   - Embedded systems are tightly integrated with the hardware they control, including sensors, actuators, displays, and communication interfaces.
   - They often interface directly with physical components and peripherals to interact with the external environment or other systems.
5. **Real-Time Operation:**
   - Many embedded systems require real-time operation, where timely responses to external events or inputs are critical for their proper functioning.
   - They may employ real-time operating systems (RTOS) or specialized software techniques to meet timing constraints and ensure deterministic behavior.
6. **Application-Specific Design:**
   - Embedded systems are designed with a deep understanding of the specific requirements, constraints, and characteristics of the target application or industry.
   - They are customized and optimized for the intended use case, often requiring domain-specific knowledge and expertise in areas such as automotive, healthcare, industrial automation, etc.

In summary, embedded systems are specialized computing systems optimized for performing dedicated functions within various devices and applications. They are characterized by their purpose-built functionality, resource constraints, integration with hardware, single-purpose nature, and often real-time operation. These attributes distinguish them from general-purpose computing systems and underscore their importance in powering a wide range of electronic devices and systems in modern society

2. **Define a single-chip microcontroller system and describe its architecture.**

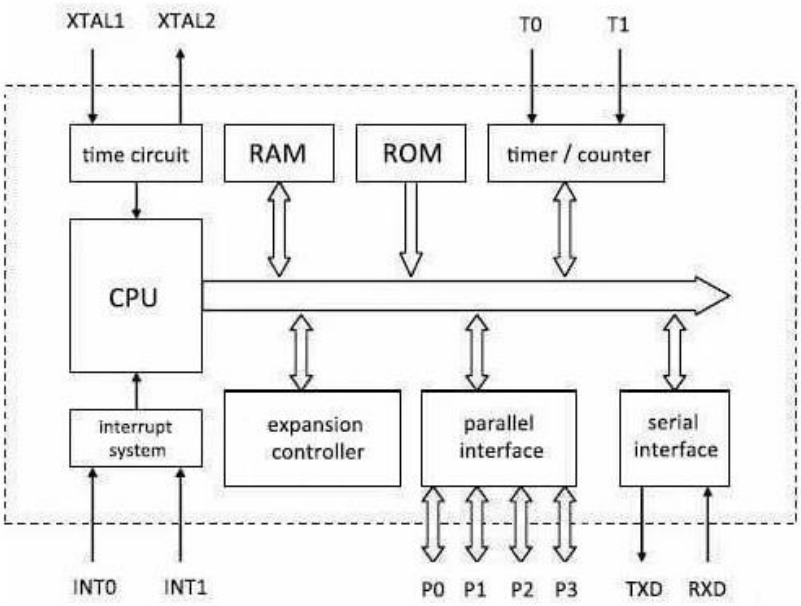

basic struture of single-chip microcomputer

A single-chip microcontroller system, often simply referred to as a microcontroller, is a compact integrated circuit (IC) that contains the essential components of a computer system on a single chip. Microcontrollers are commonly used in embedded systems to control various devices and perform specific tasks. They are widely employed in applications such as IoT devices, consumer electronics, automotive systems, industrial automation, medical devices, and more.

Architecture of a Single-Chip Microcontroller System:

The architecture of a typical single-chip microcontroller system consists of several key components integrated onto a single chip:

1. **Central Processing Unit (CPU):**
   - The CPU is the core processing unit responsible for executing instructions and performing computations.
   - In microcontrollers, the CPU is often based on a reduced instruction set computing (RISC) architecture to optimize performance and power efficiency.
   - The CPU may include one or more processor cores, such as 8-bit, 16-bit, or 32-bit cores, depending on the complexity of the microcontroller.
2. **Memory:**
   - Microcontrollers typically include various types of memory for storing program instructions, data, and intermediate results:
     - **Flash Memory:** Non-volatile memory used to store the program code (firmware) that controls the microcontroller's operation.
     - **Random Access Memory (RAM):** Volatile memory used for storing data and variables during program execution.
     - **Electrically Erasable Programmable Read-Only Memory (EEPROM):** Non-volatile memory used for storing configuration settings, calibration data, and other persistent information.
3. **Input/Output (I/O) Ports:**
   - Microcontrollers feature multiple I/O ports or pins that serve as interfaces for connecting external devices, sensors, actuators, and communication interfaces.
   - These ports can be configured as digital inputs or outputs, analog inputs, PWM (Pulse Width Modulation) outputs, UART (Universal Asynchronous Receiver-Transmitter) ports, SPI (Serial Peripheral Interface) ports, I2C (Inter-Integrated Circuit) ports, etc.
4. **Timers and Counters:**
   - Microcontrollers typically include built-in timers and counters that facilitate tasks such as generating precise timing intervals, measuring pulse widths, and controlling periodic events.
   - These peripherals are often used for tasks such as generating PWM signals, implementing time-based operations, and interfacing with external devices.
5. **Analog-to-Digital Converter (ADC) and Digital-to-Analog Converter (DAC):**
   - Many microcontrollers include integrated ADCs and DACs for interfacing with analog sensors and actuators.
   - ADCs convert analog signals (e.g., from temperature sensors, light sensors) into digital data that can be processed by the microcontroller.
   - DACs convert digital signals from the microcontroller into analog voltages or currents to control analog devices (e.g., motor speed control, audio output).
6. **Communication Interfaces:**
   - Microcontrollers often support various communication protocols and interfaces for connecting to other devices and systems:
     - **Serial Communication:** UART, SPI, I2C.
     - **Wireless Communication:** Wi-Fi, Bluetooth, Zigbee, LoRa, cellular.
     - **Ethernet:** Wired networking interface for connecting to local area networks (LANs) or the internet.
     - **USB:** Universal Serial Bus interface for connecting to external peripherals and host devices.
7. **Peripheral Modules:**
   - Microcontrollers may include additional built-in peripherals and modules to support specific functionalities, such as:
     - **PWM Controllers:** For generating analog-like signals with variable duty cycles.

- **Watchdog Timer:** For monitoring the system's operation and resetting it if it becomes unresponsive.
- **Real-Time Clock (RTC):** For keeping track of time and date even when the system is powered off.
- **Interrupt Controller:** For managing interrupts and handling asynchronous events.

In summary, a single-chip microcontroller system integrates the essential components of a computer system onto a single chip, including CPU, memory, I/O ports, timers/counters, ADCs/DACs, communication interfaces, and peripheral modules. This compact and integrated design makes microcontrollers well-suited for embedded systems, where space, cost, and power constraints are critical considerations.

3. **Discuss the components typically found in a microcontroller (e.g., CPU, memory, I/O ports).**

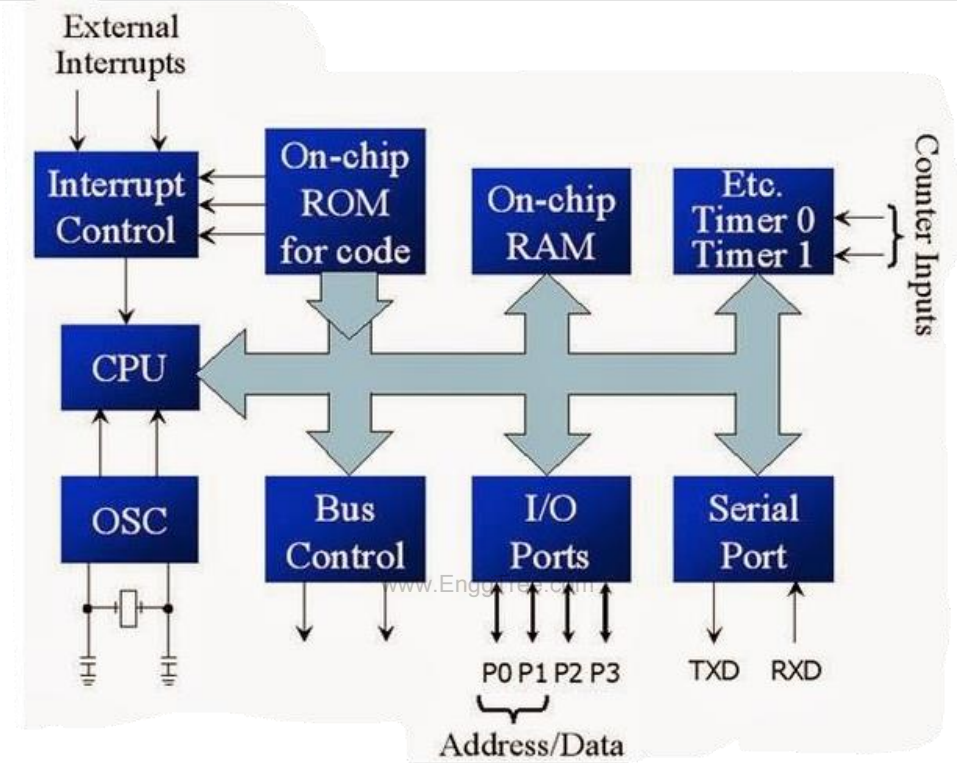

- **Central Processing Unit (CPU):**
  a. The CPU is the core processing unit responsible for executing instructions and performing calculations.
  b. It fetches instructions from memory, decodes them, and executes them to perform the desired operations.
  c. Microcontrollers often feature CPUs based on reduced instruction set computing (RISC) architectures to optimize performance and power efficiency.
- **Memory:**
  a. Microcontrollers include several types of memory for storing program code, data, and configuration settings:
     i. **Flash Memory:** Non-volatile memory used to store the program code (firmware) that controls the microcontroller's operation. It retains data even when power is removed.
     ii. **Random Access Memory (RAM):** Volatile memory used for storing data and variables during program execution. RAM is fast but loses its contents when power is removed.
     iii. **Electrically Erasable Programmable Read-Only Memory (EEPROM):** Non-volatile memory used for storing configuration settings, calibration data, and other persistent information. EEPROM can be read from and written to, but it typically has limited read/write cycles compared to flash memory.
- **Input /Output (I/O) Ports:**
  a. Microcontrollers feature multiple I/O ports or pins that serve as interfaces for connecting external devices, sensors, actuators, and communication interfaces.

b. These ports can be configured as digital inputs or outputs, analog inputs, PWM (Pulse Width Modulation) outputs, UART (Universal Asynchronous Receiver-Transmitter) ports, SPI (Serial Peripheral Interface) ports, I2C (Inter-Integrated Circuit) ports, etc.

- **Timers and Counters:**
  a. Microcontrollers typically include built-in timers and counters that facilitate tasks such as generating precise timing intervals, measuring pulse widths, and controlling periodic events.
  b. These peripherals are often used for tasks such as generating PWM signals, implementing time-based operations, and interfacing with external devices.
- **Analog-to-Digital Converter (ADC) and Digital-to-Analog Converter (DAC):**
  a. Many microcontrollers include integrated ADCs and DACs for interfacing with analog sensors and actuators.
  b. ADCs convert analog signals (e.g., from temperature sensors, light sensors) into digital data that can be processed by the microcontroller.
  c. DACs convert digital signals from the microcontroller into analog voltages or currents to control analog devices (e.g., motor speed control, audio output).
- **Communication Interfaces:**
  Microcontrollers support various communication protocols and interfaces for connecting to other devices and systems:
  a. **Serial Communication:** UART, SPI, I2C.
  b. **Wireless Communication:** Wi-Fi, Bluetooth, Zigbee, LoRa, cellular.
  c. **Ethernet:** Wired networking interface for connecting to local area networks (LANs) or the internet.
  d. **USB:** Universal Serial Bus interface for connecting to external peripherals and host devices.

- **Peripheral Modules:**
  a. Microcontrollers may include additional built-in peripherals and modules to support specific functionalities, such as:
     a. **PWM Controllers:** For generating analog-like signals with variable duty cycles.
     b. **Watchdog Timer:** For monitoring the system's operation and resetting it if it becomes unresponsive.
     c. **Real-Time Clock (RTC):** For keeping track of time and date even when the system is powered off.
     d. **Interrupt Controller:** For managing interrupts and handling asynchronous events.

These components work together to enable microcontrollers to perform a wide range of tasks within embedded systems, from simple control applications to complex data processing and communication tasks

UNIT – IV
CONTROLLERS
PART – A

1.	**Name two key features of C++.**
	Two key features of C++ are its support for object-oriented programming and its performance efficiency.
2.	**What are two advantages of using Python for programming?**
	Two advantages of using Python for programming are its simplicity and readability, as well as its extensive libraries and frameworks.
3.	**List two common data types in both C++ and Python.**
	Two common data types in both C++ and Python are integers and strings.
4.	**Name two popular distributions of the Linux operating system.**
	Two popular distributions of the Linux operating system are Ubuntu and Fedora.
5.	**Mention two advantages of using Linux over other operating systems.**
	Two advantages of using Linux over other operating systems are its open-source nature, which fosters flexibility and customization, and its robust security features.
6.	**Name two common I/O devices that can be controlled by both Arduino and Raspberry Pi.**
	Two common I/O devices that can be controlled by both Arduino and Raspberry Pi are LEDs (Light Emitting Diodes) and motors.
7.	**List two examples of sensors commonly used for detecting environmental conditions.**
	Two examples of sensors commonly used for detecting environmental conditions are temperature sensors and humidity sensors.
8.	**Mention two actuators that can be controlled using Arduino or Raspberry Pi.**
	Two actuators that can be controlled using Arduino or Raspberry Pi are servo motors and stepper motors.
9.	**What does an LED stand for?**
	LED stands for Light Emitting Diode. www.EnggTree.com
10.	**Describe the function of a push button in an electronic circuit.**
	A push button in an electronic circuit acts as a switch that completes or interrupts a circuit when pressed.
11.	**How can a push button be used to control an LED?**
	A push button can be used to control an LED by connecting the LED and a current-limiting resistor in series with the push button. When the button is pressed, it completes the circuit, allowing current to flow through the LED, thus illuminating it.
12.	**Name two types of light intensity sensors.**
	Two types of light intensity sensors are photocells (also known as LDRs - Light Dependent Resistors) and photodiodes.
13.	**How does a light intensity sensor detect changes in light levels?**
	A light intensity sensor detects changes in light levels by measuring the resistance or voltage across its terminals. When exposed to light, the sensor's resistance or voltage changes, indicating the intensity of light falling on it.
14.	**Explain how an ultrasonic distance sensor measures distance.**
	An ultrasonic distance sensor measures distance by emitting ultrasonic waves and then calculating the time it takes for the waves to bounce back after hitting an object. Using the speed of sound, it determines the distance to the object.
15.	**Name two types of temperature sensors.**
	Two types of temperature sensors are thermistors and thermocouples.

PART – B

1. Compare and contrast the syntax and use cases of C++ and Python.

1. **Syntax**:
   - **C++**: C++ syntax is more complex and requires explicit declaration of data types, memory management, and manual memory allocation and deallocation using pointers. It uses curly braces `{}` to denote blocks of code and semicolons `;` to terminate statements.

Example:

```
cpp
Copy code
#include <iostream>
using namespace std;

int main() {
    int num = 5;
    cout << "Hello, World! The value of num is: " << num << endl;
    return 0;
}
```

   - **Python**: Python syntax is more concise and readable. It is dynamically typed, meaning you don't have to declare the data type of variables explicitly. Indentation (whitespace) is significant in Python and is used to denote blocks of code.

Example:

```
python
Copy code
num = 5
print("Hello, World! The value of num is:", num)
```

www.EnggTree.com

2. **Use Cases**:
   - **C++**: C++ is often used for system/application software, game development, performance-critical applications, and other areas where high performance and efficiency are crucial. It provides low-level memory manipulation and control, making it suitable for embedded systems and operating system development.
   - **Python**: Python is known for its simplicity and versatility. It is widely used in web development, data analysis, artificial intelligence, machine learning, scripting, automation, scientific computing, and more. Python's extensive libraries and frameworks make it suitable for rapid development and prototyping.
3. **Programming Paradigms**:
   - **C++**: C++ is a multi-paradigm language that supports procedural, object-oriented, and generic programming. It gives developers more control over memory and system resources.
   - **Python**: Python is a multi-paradigm language as well, but it emphasizes simplicity and readability. It supports procedural, object-oriented, and functional programming paradigms. Python's dynamic typing and high-level data structures make it easy to write concise and expressive code.

2. Explain the architecture of the Linux operating system, detailing its kernel and user space components.

The architecture of the Linux operating system follows a typical Unix-like design, with a clear separation between kernel space and user space. Here's an overview of the architecture:

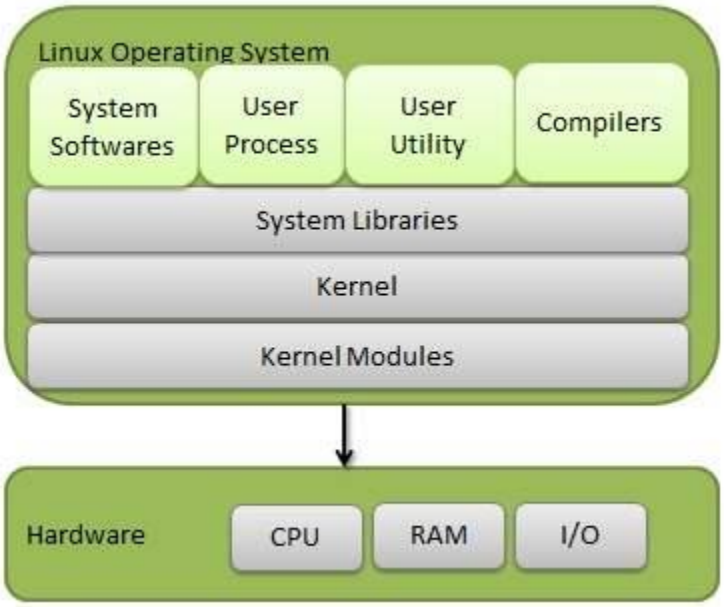

1. **Kernel**:
   - The kernel is the core component of the operating system. It interacts directly with the hardware and provides essential services to the user space.
   - Linux uses a monolithic kernel architecture, where most of the operating system's functionality, including device drivers, file system management, process management, and networking, resides within the kernel space.
   - The Linux kernel is highly modular, allowing for the addition or removal of features through loadable kernel modules (LKMs) dynamically.
   - It manages system resources such as memory, CPU, devices, and filesystems.
   - The kernel is responsible for handling system calls, which are requests made by user space programs to access resources or perform operations that require elevated privileges.
2. **User Space**:
   - User space is where user applications and processes reside. It's isolated from the kernel and can't directly access hardware resources.
   - User space consists of various system utilities, libraries, and applications that users interact with.
   - System utilities like shells (e.g., Bash), text editors (e.g., Vim), file managers, compilers, and interpreters run in user space.
   - Libraries such as the C standard library (libc) provide common functions and interfaces for user programs.
   - User applications, including web browsers, media players, office suites, development tools, and custom software, are executed in user space.
   - User processes communicate with the kernel through system calls, which act as a bridge between user space and kernel space.
3. **Interaction between Kernel and User Space**:
   - User processes communicate with the kernel through system calls, which are requests for kernel services or resources.
   - The kernel provides a set of system call interfaces that user programs can use to perform operations such as file I/O, process management, memory management, and networking.
   - When a user program needs to access hardware resources or perform privileged operations, it makes a system call, and the kernel executes the requested operation on behalf of the program.
   - The kernel ensures the security and integrity of the system by enforcing access control policies, managing user privileges, and isolating processes from each other.
   - Kernel modules can extend the functionality of the kernel without modifying its core codebase, allowing for additional device support or new features to be added dynamically.

3. **Explore the significance of the ESP8266 Wi-Fi module in IoT (Internet of Things) applications, discussing its capabilities and limitations.**

The ESP8266 Wi-Fi module has been a significant enabler for Internet of Things (IoT) applications due to its capabilities and affordability. Here's a breakdown of its significance, capabilities, and limitations:

Significance:

1. **Affordability**: The ESP8266 module is incredibly inexpensive, making it accessible for hobbyists, students, and professionals alike. Its low cost has democratized IoT development, allowing a wider range of individuals and organizations to experiment and deploy IoT solutions.
2. **Integrated Wi-Fi Connectivity**: The ESP8266 module integrates Wi-Fi connectivity, enabling IoT devices to connect to local networks and the internet without the need for additional hardware components. This feature is essential for IoT applications that require communication with other devices or cloud services.
3. **Rich Development Ecosystem**: The ESP8266 has a vast and active development ecosystem, with a large community contributing libraries, tutorials, and examples. This ecosystem makes it easier for developers to get started with the module and accelerate the development of IoT projects.
4. **Low Power Consumption**: The ESP8266 is designed to operate on low power, making it suitable for battery-powered IoT devices and applications where power efficiency is crucial.
5. **Small Form Factor**: The module's small form factor makes it ideal for embedding into various IoT devices and prototypes, including wearable devices, home automation systems, sensor nodes, and more.

Capabilities:

1. **Microcontroller**: The ESP8266 integrates a microcontroller unit (MCU), allowing it to execute custom firmware and control connected sensors, actuators, and other peripherals.
2. **Wi-Fi Connectivity**: The module supports 802.11 b/g/n Wi-Fi standards, enabling wireless communication with local networks and the internet. It can act as a Wi-Fi client or create its own access point.
3. **GPIO Pins**: The ESP8266 provides general-purpose input/output (GPIO) pins, allowing developers to interface with external components such as sensors, LEDs, displays, and relays.
4. **Analog Input**: Some variants of the ESP8266 feature analog-to-digital converters (ADC), enabling them to measure analog signals from sensors such as temperature, light, and humidity sensors.
5. **SPI, I2C, UART Interfaces**: The module supports serial peripheral interface (SPI), inter-integrated circuit (I2C), and universal asynchronous receiver-transmitter (UART) interfaces, facilitating communication with external devices and modules.

Limitations:

1. **Limited Processing Power**: The ESP8266's MCU has limited processing power compared to more advanced microcontrollers, which can constrain the complexity of IoT applications that can be implemented directly on the module.
2. **Limited Memory**: The module has limited program memory (flash) and RAM, which can restrict the size and complexity of firmware and applications that can be deployed on it.
3. **Single-Core**: The ESP8266 MCU is single-core, which may limit its ability to multitask and handle concurrent operations efficiently, especially in more complex IoT scenarios.
4. **Limited I/O Pins**: While the ESP8266 provides GPIO pins for interfacing with external components, the number of available pins may be insufficient for some IoT projects requiring a large number of sensors or actuators.

4. **Compare and contrast different models of Raspberry Pi boards in terms of their specifications, performance, and target applications.**

- **Raspberry Pi 1 Model A/B**:
  - **Specifications**:
    - Broadcom BCM2835 processor (ARMv6 architecture)
    - 256MB RAM (Model A) or 512MB RAM (Model B)
    - SD card slot for storage
    - HDMI output, USB ports, GPIO pins
  - **Performance**:
    - Basic performance suitable for lightweight tasks and educational purposes.
  - **Target Applications**:
    - Education, basic computing projects, retro gaming emulation.

- **Raspberry Pi 2 Model B**:
  - **Specifications**:
    - Broadcom BCM2836 processor (ARMv7 architecture)
    - 1GB RAM
    - MicroSD card slot
    - HDMI output, USB ports, GPIO pins
  - **Performance**:
    - Significant performance improvement over the Raspberry Pi 1, suitable for more demanding tasks such as media playback and light gaming.
  - **Target Applications**:
    - Media centers, gaming consoles, home automation, educational projects requiring moderate processing power.
- **Raspberry Pi 3 Model B/B+**:
  - **Specifications**:
    - Broadcom BCM2837 processor (ARMv8 architecture)
    - 1GB RAM (3 Model B), 1GB RAM (3 Model B+)
    - MicroSD card slot
    - HDMI output, USB ports, GPIO pins, Wi-Fi, Bluetooth (Model B+)
  - **Performance**:
    - Improved performance and connectivity options, suitable for a wide range of applications including multimedia, IoT, and networking projects.
  - **Target Applications**:
    - Multimedia centers, IoT devices, network servers, embedded systems, home automation.
- **Raspberry Pi 4 Model B**:
  - **Specifications**:
    - Broadcom BCM2711 processor (ARM Cortex-A72 architecture)
    - 2GB/4GB/8GB RAM options
    - MicroSD card slot or optional USB boot
    - HDMI output, USB ports, GPIO pins, Gigabit Ethernet, Wi-Fi, Bluetooth
  - **Performance**:
    - Significant performance boost compared to previous models, capable of handling more demanding tasks such as 4K video playback, desktop computing, and multitasking.
  - **Target Applications**:
    - Desktop computing, media centers, gaming consoles, advanced IoT projects, robotics, server applications.
- **Raspberry Pi Zero/W**:
  - **Specifications**:
    - Broadcom BCM2835 processor (ARMv6 architecture)
    - 512MB RAM
    - MicroSD card slot
    - Mini HDMI output, Micro USB port, GPIO pins (with soldering)
  - **Performance**:
    - Limited performance suitable for basic projects and embedded applications.
  - **Target Applications**:
    - Wearable devices, embedded systems, IoT prototypes, projects requiring a compact form factor and low power consumption

PART – C

1. **Explore the significance of the ESP8266 Wi-Fi module in IoT (Internet of Things) applications, discussing its capabilities and limitations.**

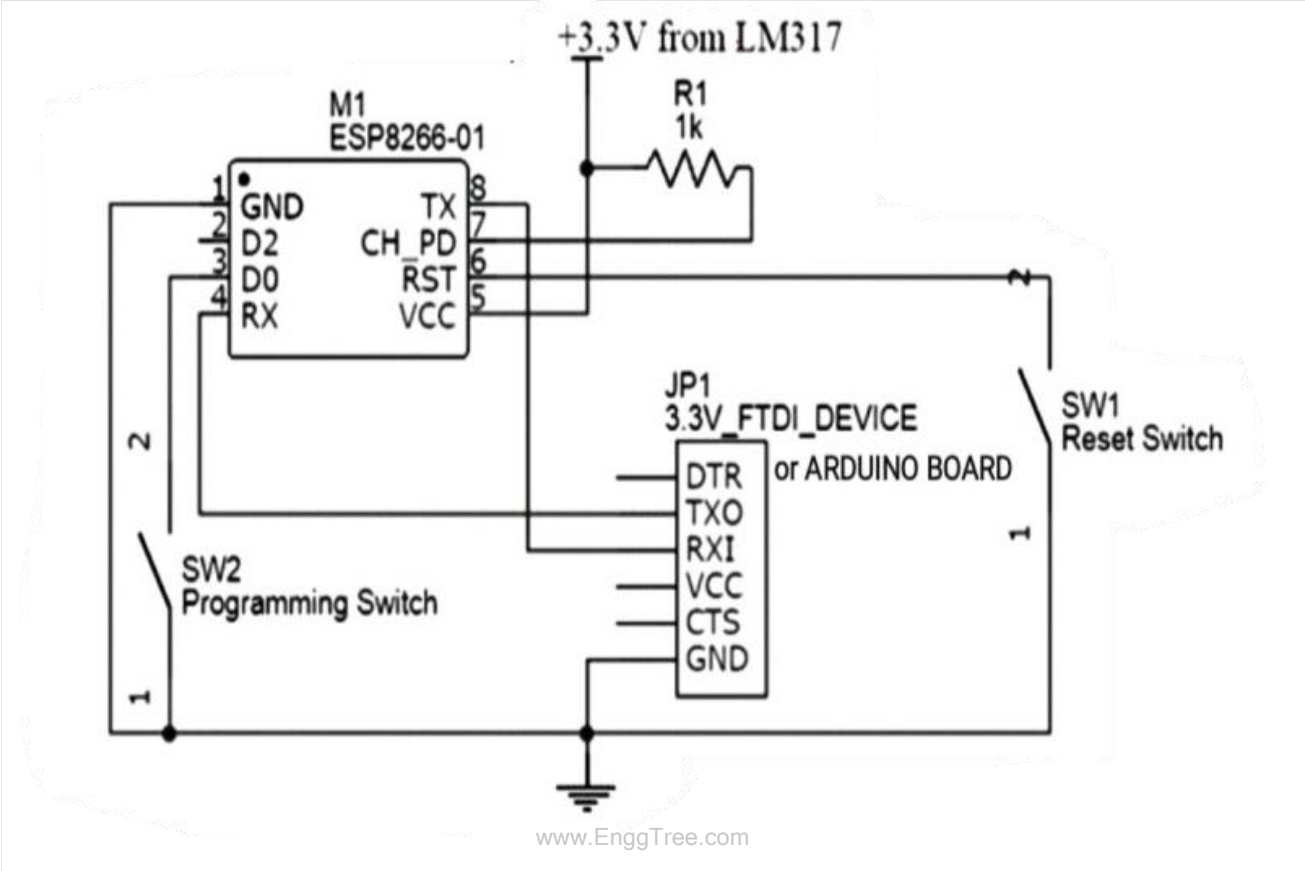

The ESP8266 Wi-Fi module has played a pivotal role in the proliferation of Internet of Things (IoT) applications due to its unique combination of capabilities, affordability, and ease of use. Let's delve deeper into its significance, capabilities, and limitations:

Significance:

1. **Affordability**: The ESP8266 module is incredibly inexpensive, making it accessible for hobbyists, students, and professionals alike. Its low cost has democratized IoT development, allowing a wider range of individuals and organizations to experiment and deploy IoT solutions without significant financial investment.
2. **Integrated Wi-Fi Connectivity**: One of the key features of the ESP8266 is its built-in Wi-Fi connectivity. This enables IoT devices to connect to local networks and the internet without the need for additional hardware components. Wi-Fi connectivity is crucial for IoT applications that require remote monitoring, control, and data exchange.
3. **Ease of Use**: The ESP8266 module is relatively easy to use, especially for those familiar with the Arduino ecosystem. It can be programmed using the Arduino IDE, which simplifies the development process for beginners and allows for rapid prototyping of IoT projects.
4. **Versatility**: Despite its small size, the ESP8266 offers a wide range of functionalities, including GPIO pins for interfacing with external sensors and actuators, analog-to-digital converters (ADC) for reading analog sensors, and support for communication protocols such as SPI, I2C, and UART.
5. **Community Support**: The ESP8266 has a large and active community of developers and enthusiasts who contribute libraries, tutorials, and examples. This rich ecosystem makes it easier for developers to find resources, troubleshoot issues, and accelerate the development of their IoT projects.

Capabilities:

1. **Microcontroller**: The ESP8266 integrates a microcontroller unit (MCU), allowing it to execute custom firmware and control connected sensors, actuators, and other peripherals.

2. **Wi-Fi Connectivity**: The module supports 802.11 b/g/n Wi-Fi standards, enabling wireless communication with local networks and the internet. It can act as a Wi-Fi client, connect to existing networks, or create its own access point for other devices to connect to.
3. **GPIO Pins**: The ESP8266 provides general-purpose input/output (GPIO) pins, allowing developers to interface with external components such as sensors, LEDs, displays, and relays. This enables the creation of a wide variety of IoT applications.
4. **Analog Input**: Some variants of the ESP8266 feature analog-to-digital converters (ADC), enabling them to measure analog signals from sensors such as temperature, light, and humidity sensors.
5. **Low Power Consumption**: The ESP8266 is designed to operate on low power, making it suitable for battery-powered IoT devices and applications where power efficiency is crucial.

Limitations:

1. **Processing Power**: The ESP8266 MCU has limited processing power compared to more advanced microcontrollers, which can constrain the complexity of IoT applications that can be implemented directly on the module.
2. **Memory Constraints**: The module has limited program memory (flash) and RAM, which can restrict the size and complexity of firmware and applications that can be deployed on it.
3. **Single-Core**: The ESP8266 MCU is single-core, which may limit its ability to multitask and handle concurrent operations efficiently, especially in more complex IoT scenarios.
4. **Limited I/O Pins**: While the ESP8266 provides GPIO pins for interfacing with external components, the number of available pins may be insufficient for some IoT projects requiring a large number of sensors or actuators.

2. Evaluate the role of Raspberry Pi in promoting computer science education and facilitating DIY electronics projects.

Raspberry Pi has played a significant role in promoting computer science education and facilitating do-it-yourself (DIY) electronics projects in several ways:

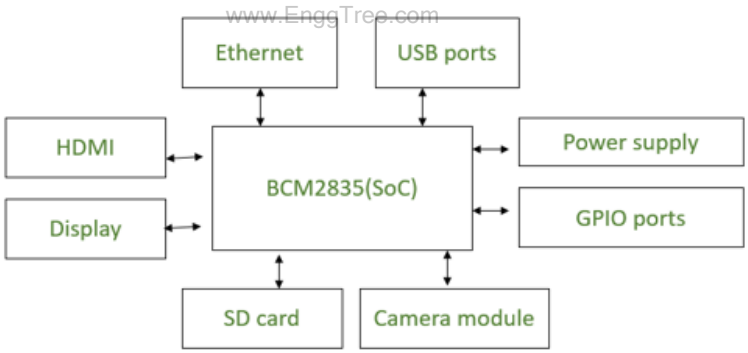

1. **Affordability**: Raspberry Pi boards are incredibly affordable, making them accessible to students, hobbyists, and educators with limited budgets. This affordability lowers the barrier to entry for learning about computing and electronics, allowing more people to participate in educational and DIY projects.
2. **Educational Resources**: The Raspberry Pi Foundation provides a wealth of educational resources, including tutorials, guides, and projects designed to teach computer science concepts and programming skills. These resources are suitable for learners of all ages and skill levels, from beginners to advanced users.
3. **Versatility**: Raspberry Pi boards are versatile platforms that can be used for a wide range of educational and DIY projects. They can be used as small, low-power computers for programming, web browsing, and office tasks, as well as embedded systems for robotics, home automation, and IoT applications.
4. **Programming**: Raspberry Pi boards support a variety of programming languages, including Python, Scratch, Java, and C/C++, making them ideal for teaching programming concepts and languages in a

hands-on, interactive manner. Students can learn to write code, create applications, and explore computational concepts in a practical way.

5. **Hardware Interfacing**: Raspberry Pi boards feature GPIO pins that allow users to interface with external hardware components such as sensors, actuators, displays, and cameras. This enables learners to explore concepts in electronics, robotics, and physical computing, turning theoretical knowledge into tangible projects.
6. **Community Support**: The Raspberry Pi community is large and vibrant, with a diverse range of users sharing ideas, projects, and expertise. This community support network provides valuable resources, advice, and inspiration for educators and DIY enthusiasts, fostering collaboration and innovation.
7. **Impact in Schools**: Raspberry Pi has made significant inroads into educational institutions worldwide, with many schools incorporating Raspberry Pi into their computer science and STEM (science, technology, engineering, and mathematics) curricula. These efforts expose students to computing concepts, problem-solving skills, and hands-on learning experiences that are essential for success in the digital age.

www.EnggTree.com

UNIT – V
MECHATRONICS AND IoT CASE STUDIES
PART – A

1. Explain two methods used for actuating control surfaces on drones.

Two methods for actuating control surfaces on drones are:

a. Servo motors: These are commonly used for precise control of control surfaces such as ailerons, elevators, and rudders on drones. Servo motors can accurately position the control surfaces based on the input from the flight controller.

b. Electric actuators: These can be linear or rotary actuators powered by electric motors. They are used to move larger control surfaces or perform more complex movements on drones.

2. Name two sensors commonly used for navigation and stabilization in drones.

Two sensors commonly used for navigation and stabilization in drones are:

a. Inertial Measurement Unit (IMU): An IMU typically includes accelerometers and gyroscopes to measure the drone's acceleration and rotation rates, respectively. These measurements are crucial for stabilizing the drone and determining its orientation in space.

b. Global Positioning System (GPS): GPS receivers provide precise location information to drones, enabling autonomous navigation and waypoint following. GPS is essential for long-range navigation and accurate position holding.

3. Describe two techniques used for obstacle avoidance in autonomous robots.

Two techniques used for obstacle avoidance in autonomous robots are:

a. Lidar (Light Detection and Ranging): Lidar sensors emit laser pulses and measure the time it takes for the pulses to bounce back from surrounding objects. By analyzing the reflected pulses, robots can create detailed 3D maps of their surroundings and detect obstacles to avoid collisions.

b. Computer vision: Cameras coupled with image processing algorithms can detect obstacles and analyze the robot's environment in real-time. Techniques such as object recognition, depth estimation, and motion tracking enable robots to navigate safely in dynamic environments.

4. Mention two components typically found in a vision system for robot navigation.

Two components typically found in a vision system for robot navigation are:

a. Cameras: Cameras capture images or video feed of the robot's surroundings. They serve as the primary sensor for computer vision algorithms to analyze and interpret the environment.

b. Image processing algorithms: These algorithms process the visual data obtained from cameras to extract relevant information such as obstacle detection, lane detection, object recognition, etc. They enable the robot to make decisions and navigate autonomously based on the analyzed data.

5. What are two advantages of electronic ignition systems over traditional mechanical ignition systems in automobiles?

Two advantages of electronic ignition systems over traditional mechanical ignition systems in automobiles are:

a. Improved reliability: Electronic ignition systems have fewer moving parts compared to mechanical systems, reducing the likelihood of wear and failure. They are less susceptible to mechanical malfunctions, resulting in more reliable engine ignition.

b. Enhanced performance: Electronic ignition systems can precisely control the timing and duration of spark ignition, leading to optimized engine performance, better fuel efficiency, and reduced emissions compared to mechanical systems.

6. Name two components of an electronic ignition system.

Two components of an electronic ignition system are:

a. Ignition control module (ICM): The ICM is an electronic component responsible for controlling the ignition timing and firing sequence of the spark plugs. It receives inputs from various sensors and calculates the optimal ignition timing for engine operation.

b. Ignition coil: The ignition coil converts low-voltage electrical energy from the battery into high-voltage pulses required to generate sparks at the spark plugs. It amplifies the power supplied to the spark plugs, ensuring reliable ignition of the air-fuel mixture in the combustion chambers.

7. Explain two ways ABS helps improve vehicle safety during braking.

Two ways ABS helps improve vehicle safety during braking are:

a. Prevention of wheel lockup: ABS monitors the rotational speed of each wheel and modulates brake pressure individually to prevent wheel lockup during braking. This prevents skidding and allows the driver to maintain steering control, reducing the risk of accidents.

b. Shortened stopping distances: By preventing wheel lockup, ABS maximizes the braking force that can be applied to the wheels without causing skidding. This helps to shorten the vehicle's stopping distance, particularly on slippery or uneven road surfaces.

8. Name two sensors used in an ABS to monitor wheel speed.

Two sensors used in an ABS to monitor wheel speed are:

a. Wheel speed sensors: These sensors are mounted at each wheel or on the differential and detect the rotational speed of the wheels. They send signals to the ABS control module, allowing it to monitor the speed of each wheel and detect any discrepancies that indicate wheel lockup or skidding.

b. Tone rings (or reflector rings): Tone rings are toothed or magnetic rings mounted on the wheel hub or axle shaft. They work in conjunction with wheel speed sensors to generate electrical signals corresponding to the rotational speed of the wheels. These signals are used by the ABS system to determine wheel speed and detect wheel slip.

9. Describe two functions of Electronic Brake force Distribution in modern vehicles.

Two functions of Electronic Brake force Distribution (EBD) in modern vehicles are:

a. Optimizing brake force distribution: EBD dynamically adjusts the distribution of braking force between the front and rear axles based on various factors such as vehicle load, road conditions, and braking dynamics. This ensures that the maximum braking force is applied to each wheel without causing wheel lockup or instability.

b. Compensation for load imbalance: EBD compensates for changes in vehicle load distribution during braking by adjusting the brake force applied to each wheel accordingly. This helps maintain stability and control of the vehicle, especially when braking under heavy loads or during emergency maneuvers.

10. How does EBD help improve braking efficiency and stability?

EBD helps improve braking efficiency and stability by:

www.EngFree.com

(i) **Reducing the risk of wheel lockup:** By dynamically adjusting brake force distribution, EBD prevents individual wheels from locking up during braking, maximizing the braking force that can be applied without causing skidding or loss of control.

(ii) **Enhancing stability and control:** EBD ensures balanced braking across all wheels, regardless of vehicle load or road conditions. This helps to maintain stability and control of the vehicle during braking manoeuvres, reducing the risk of skidding, spinouts, or loss of traction.

PART – B

1. Discuss the key components involved in the actuation and control systems of drones, and how they interact to achieve stable flight.

The actuation and control systems of drones comprise several key components that work together to achieve stable flight. These components include:

1. **Flight Controller:** The flight controller is essentially the brain of the drone, responsible for processing sensor data, executing flight algorithms, and generating control commands for the actuators. It typically consists of a microcontroller or microprocessor, sensors (such as gyroscopes, accelerometers, and sometimes GPS), and firmware/software to manage flight operations.
2. **Actuators:** Actuators are devices responsible for physically moving the control surfaces of the drone to control its orientation and flight path. Common types of actuators used in drones include servo motors for controlling ailerons, elevators, and rudders, as well as electric motors for controlling propellers.
3. **Control Surfaces:** Control surfaces are movable aerodynamic surfaces on the drone, such as ailerons, elevators, rudders, and flaps. These surfaces alter the aerodynamic forces acting on the drone to control its pitch, roll, and yaw motions. Actuators move these control surfaces based on the commands received from the flight controller.

4. **Sensors:** Sensors provide feedback to the flight controller about the drone's orientation, velocity, altitude, and other flight parameters. Common sensors used in drones include gyroscopes (to measure rotational motion), accelerometers (to measure linear motion and gravity), magnetometers (to measure orientation with respect to Earth's magnetic field), and barometers (to measure altitude based on air pressure).
5. **Power System:** The power system of a drone typically consists of a battery or a fuel source (in the case of gas-powered drones), electronic speed controllers (ESCs) for controlling the speed of electric motors, and a power distribution system to distribute power to various components of the drone.
6. **Communication System:** Drones often incorporate communication systems for receiving commands from the operator (either manually or autonomously) and transmitting telemetry data back to the operator. These systems may include radio transmitters and receivers, telemetry modules, and wireless communication protocols.

These components interact in a coordinated manner to achieve stable flight:

(i) The flight controller continuously receives input from sensors, such as gyroscopes and accelerometers, to determine the drone's current orientation, velocity, and other flight parameters.
(ii) Based on this sensor data and user input (if applicable), the flight controller calculates the necessary control commands to achieve the desired flight manoeuvres.
(iii) The flight controller then sends these control commands to the actuators, which adjust the position of the control surfaces and/or the speed of the propellers to control the drone's pitch, roll, and yaw motions.
(iv) As the drone manoeuvres through the air, the sensors continue to provide feedback to the flight controller, allowing it to make real-time adjustments to maintain stability and control.
(v) Additionally, the power system provides the necessary electrical or mechanical power to the actuators and other on board components, while the communication system enables interaction between the drone and its operator.

2. Explore the role of vision systems in enabling autonomy in robots, including object recognition, navigation, and path planning.

www.EasyTrick.com

Vision systems play a crucial role in enabling autonomy in robots by providing them with the ability to perceive and interpret their surroundings visually. These systems utilize cameras and sophisticated image processing algorithms to gather information about the environment, recognize objects, navigate through spaces, and plan optimal paths. Here's how vision systems contribute to various aspects of robot autonomy:

1. **Object Recognition:** Vision systems can identify and classify objects in the robot's environment using techniques such as image classification, object detection, and semantic segmentation.
   - **Image Classification:** This involves assigning a label or category to an entire image based on its visual content. For example, a robot equipped with a vision system can differentiate between various objects like people, cars, trees, and buildings in its surroundings.
   - **Object Detection:** Object detection algorithms localize and identify specific objects within an image by drawing bounding boxes around them. This capability allows robots to detect obstacles, tools, or items of interest in their environment.
   - **Semantic Segmentation:** Semantic segmentation divides an image into different regions and assigns semantic labels to each pixel, indicating the object or scene category it belongs to. This fine-grained understanding of the visual scene enables robots to navigate around obstacles and interact with their environment more intelligently.
2. **Navigation:** Vision-based navigation enables robots to move autonomously through dynamic environments, avoiding obstacles and reaching predefined goals.
   - **Visual SLAM (Simultaneous Localization and Mapping):** SLAM algorithms use visual input from cameras to simultaneously build a map of the environment and localize the robot within it. By tracking features in the environment and estimating the robot's pose relative to these features, robots can navigate and explore unknown spaces autonomously.
   - **Lane Detection and Following:** Vision systems can identify lane markings on roads and assist robots, such as autonomous vehicles or delivery drones, in staying within designated lanes while navigating through traffic.
   - **Visual Odometry:** Visual odometry estimates the robot's motion by tracking visual features over time. By analyzing changes in the positions of these features between consecutive

frames, robots can estimate their own movement and navigate through environments without relying on external sensors like GPS.

3. **Path Planning:** Vision-based path planning algorithms generate collision-free trajectories for robots to follow while navigating from their current location to a desired destination.
    - **Occupancy Grid Mapping**: Vision systems generate occupancy grid maps of the environment, where each grid cell represents the probability of occupancy by an obstacle. Path planning algorithms then search for safe paths through these maps, avoiding collisions with obstacles.
    - **Obstacle Avoidance:** Vision systems continuously monitor the robot's surroundings for obstacles and dynamically adjust planned paths to avoid collisions. By detecting obstacles in real-time and predicting their future positions, robots can navigate safely in cluttered environments.

3. Explore the technological advancements and principles behind ABS, EBD, and Adaptive Cruise Control systems in modern vehicles, and their contributions to safety, efficiency, and comfort.

Let's explore the technological advancements and principles behind Anti-lock Braking System (ABS), Electronic Brake-force Distribution (EBD), and Adaptive Cruise Control (ACC) systems in modern vehicles, along with their contributions to safety, efficiency, and comfort:

1. **Anti-lock Braking System (ABS):**

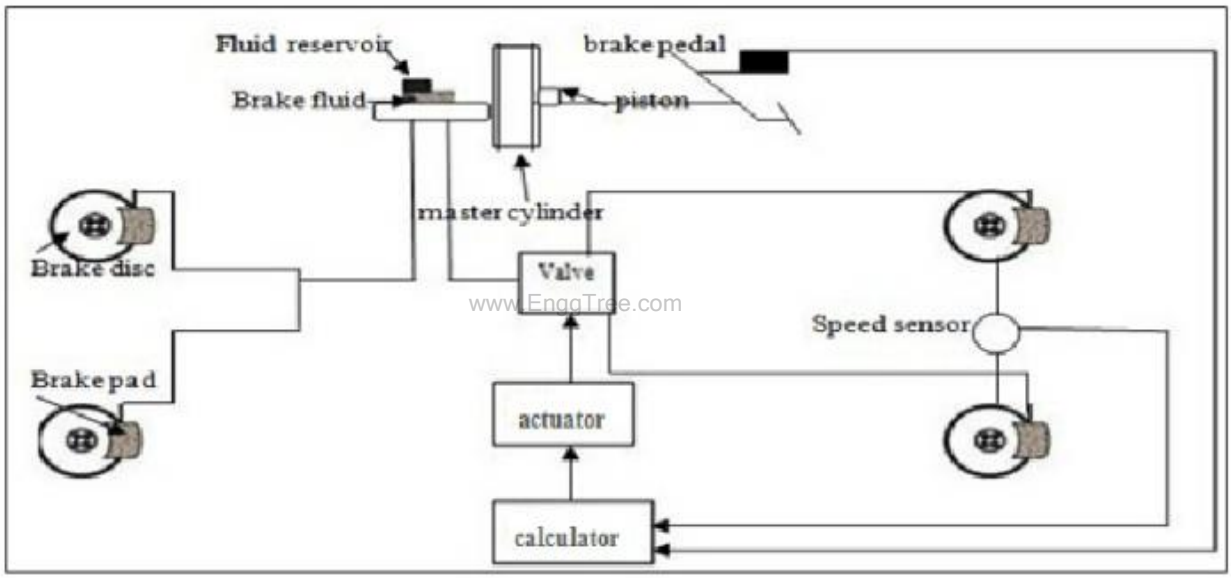

ABS is a safety feature designed to prevent wheel lockup during braking, thereby allowing the driver to maintain steering control and avoid skidding. The system achieves this by modulating brake pressure to individual wheels based on sensor feedback. Key advancements and principles include:

- Wheel Speed Sensors: ABS utilizes sensors at each wheel to monitor its rotational speed. If a wheel is about to lock up, its speed decreases rapidly compared to other wheels, signaling potential skidding.
- Hydraulic Control Unit (HCU): The HCU regulates brake pressure to individual wheels based on inputs from wheel speed sensors. It modulates brake pressure by rapidly pulsing the brakes to prevent lockup while maintaining braking force.
- Benefits: ABS enhances vehicle safety by reducing the risk of accidents caused by skidding or loss of control during braking. It allows drivers to maintain steering control on slippery or uneven road surfaces, improving overall vehicle stability and safety.

2. **Electronic Brake-force Distribution (EBD):** EBD complements ABS by optimizing brake force distribution between the front and rear axles of the vehicle. It adjusts brake pressure based on various factors such as vehicle load, road conditions, and braking dynamics to ensure maximum braking efficiency and stability. Key principles and advancements include:
    - Load Sensors: EBD systems incorporate sensors to measure the weight distribution of the vehicle, including passenger and cargo load. This information is used to adjust brake force distribution accordingly.

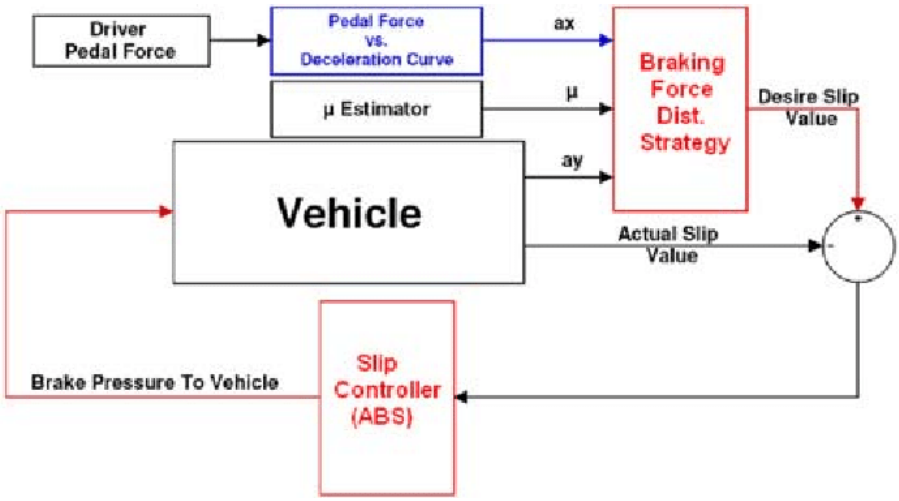

- Brake Pressure Control: EBD systems regulate brake pressure to individual wheels based on load distribution and braking conditions. By distributing brake force optimally, EBD enhances braking efficiency, reduces stopping distances, and improves vehicle stability.
- Benefits: EBD enhances braking performance and stability under varying load conditions, improving overall vehicle safety and control. It ensures consistent braking behavior across different driving scenarios, leading to a more predictable and comfortable driving experience.

3. **Adaptive Cruise Control (ACC):** ACC is an advanced driver assistance system that automatically adjusts vehicle speed to maintain a safe following distance from the vehicle ahead. It utilizes sensors such as radar or lidar to monitor the distance and relative speed of vehicles in the vicinity. Key advancements and principles include:
   - Long-range Sensors: ACC systems incorporate long-range sensors such as radar or lidar to detect vehicles ahead and measure their distance and relative speed accurately.

www.EnggTree.com

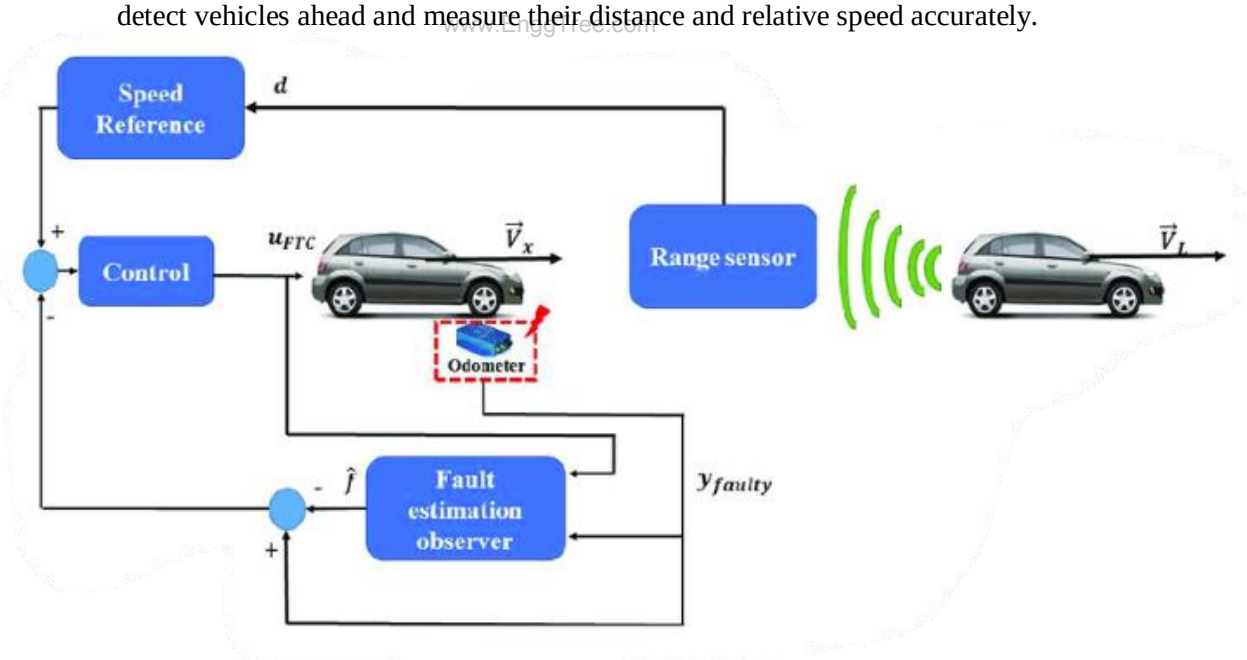

   - Control Algorithms: ACC algorithms calculate the optimal acceleration and deceleration rates to maintain a safe following distance from the lead vehicle. The system can adjust vehicle speed smoothly and predictively to avoid abrupt braking or acceleration.
   - Benefits: ACC enhances driving comfort and reduces driver fatigue by automatically adjusting vehicle speed in response to traffic conditions. It improves safety by reducing the risk of rear-end collisions and promoting smoother traffic flow. Additionally, ACC can enhance fuel efficiency by optimizing acceleration and deceleration patterns.

PART – C

1. **Explore the key components and architecture of a centralized water management system, including sensors, actuators, and control systems.**

A centralized water management system is designed to efficiently monitor and control various aspects of water distribution, treatment, and usage within a centralized infrastructure. Such systems are commonly implemented in large-scale facilities like industrial plants, commercial buildings, residential complexes, and municipal water supply networks. Here are the key components and architecture typically found in a centralized water management system:

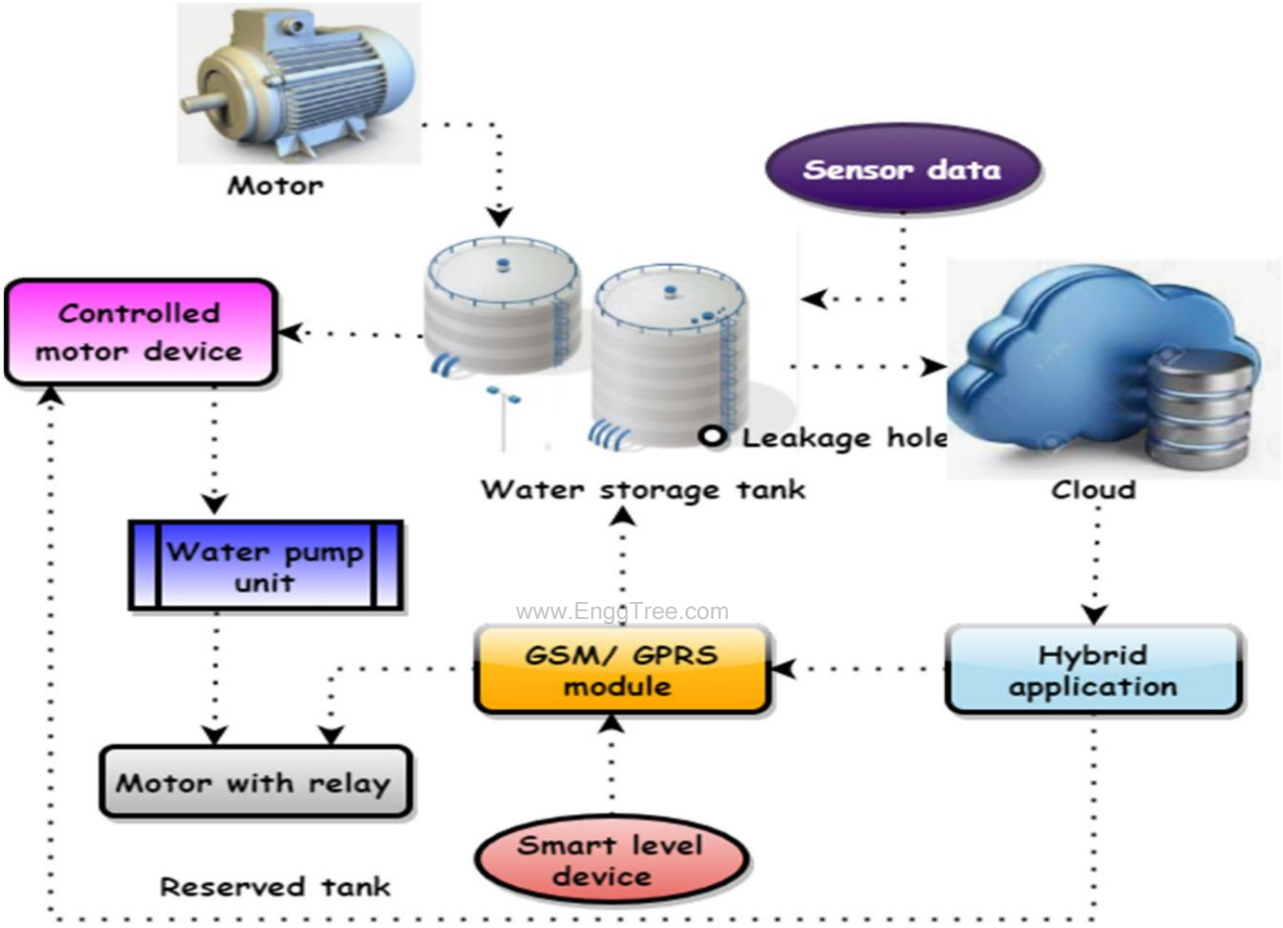

1. **Sensors:**
   - Flow Sensors: These sensors measure the flow rate of water at different points within the system, allowing for the monitoring of water usage and detection of leaks or abnormalities.
   - Pressure Sensors: Pressure sensors measure water pressure at various points in the system to ensure optimal pressure levels for distribution and identify issues such as pipe blockages or leaks.
   - Level Sensors: Level sensors monitor the water levels in storage tanks, reservoirs, or treatment facilities to maintain adequate water supply and prevent overflow or depletion.
   - Quality Sensors: These sensors analyze water quality parameters such as pH, turbidity, chlorine levels, and contaminants to ensure compliance with regulatory standards and monitor treatment effectiveness.
   - Temperature Sensors: Temperature sensors monitor water temperature to optimize heating or cooling systems and prevent issues such as freezing or overheating.
2. **Actuators:**
   - Valves: Control valves regulate the flow of water within the system by opening, closing, or adjusting the flow rate based on signals from the control system. They can include isolation valves, throttling valves, and pressure-reducing valves.

- Pumps: Water pumps are used to maintain water pressure, transport water from one location to another, and circulate water within the system. Variable frequency drives (VFDs) may be used to control pump speed and optimize energy efficiency.
- Mixers and Agitators: These devices are used in water treatment processes to mix chemicals, agitate water, and facilitate the mixing of different water sources or additives.

3. **Control Systems:**
   - Programmable Logic Controllers (PLCs): PLCs are the central control units of the water management system, responsible for processing sensor data, executing control algorithms, and sending commands to actuators. They are programmable devices capable of handling complex control logic and communication with other system components.
   - Human-Machine Interface (HMI): HMIs provide a user-friendly interface for operators to monitor system performance, view real-time data, configure settings, and respond to alarms or alerts. HMIs can be implemented through graphical displays, touch screens, or software applications.
   - Supervisory Control and Data Acquisition (SCADA): SCADA systems provide centralized monitoring and control of distributed water management infrastructure. They integrate data from sensors and control devices, provide remote access for operators, and enable data logging, trending, and analysis for optimization and decision-making.
   - Communication Networks: Communication networks facilitate data exchange between system components, including sensors, actuators, PLCs, SCADA systems, and external monitoring or control systems. Common communication protocols include Modbus, Profibus, Ethernet/IP, and wireless protocols like Wi-Fi or Zigbee.
4. **Architecture:**
   - The architecture of a centralized water management system typically consists of interconnected components arranged in a hierarchical or distributed fashion.
   - Sensors are strategically deployed throughout the water distribution and treatment infrastructure to monitor key parameters and provide feedback to the control system.
   - Actuators are positioned at critical points to control valves, pumps, and other devices to regulate water flow, pressure, temperature, and quality.
   - Control systems, including PLCs, SCADA systems, and HMIs, coordinate the operation of sensors and actuators, implement control strategies, and provide operators with real-time visibility and control over the system.

By integrating sensors, actuators, and control systems into a centralized architecture, water management systems can effectively monitor, regulate, and optimize water usage, distribution, and treatment processes to ensure reliability, efficiency, and compliance with regulatory requirements.

2. **Discuss the role of IoT sensors in precision agriculture, soil monitoring, crop health management, and resource optimization.**

The Internet of Things (IoT) sensors play a pivotal role in transforming agriculture into a data-driven and precision-based industry. By integrating sensors into agricultural practices, farmers can gather real-time data about soil conditions, crop health, weather patterns, and resource usage. This data enables precise decision-making, enhances productivity, optimizes resource utilization, and promotes sustainable farming practices. Here's how IoT sensors contribute to various aspects of precision agriculture:

1. Soil Monitoring:
   - Moisture Sensors: IoT moisture sensors measure soil moisture levels at different depths, helping farmers to optimize irrigation schedules and avoid overwatering or underwatering.
   - Temperature Sensors: Soil temperature sensors monitor soil temperature variations, which influence seed germination, plant growth, and nutrient uptake. By tracking soil temperature, farmers can make informed decisions about planting times and crop selection.
   - Nutrient Sensors: IoT nutrient sensors analyze soil nutrient levels (e.g., nitrogen, phosphorus, potassium) to assess soil fertility and guide fertilizer application. This ensures that crops receive the necessary nutrients for healthy growth while minimizing fertilizer waste and environmental impact.

2. **Crop Health Management:**
    - Imaging Sensors: Remote sensing technologies, such as drones equipped with multispectral or hyperspectral cameras, capture high-resolution images of crops to assess their health and identify areas of stress, disease, or pest infestation.
    - Leaf Wetness Sensors: IoT leaf wetness sensors monitor moisture levels on plant surfaces, helping farmers to detect conditions conducive to fungal diseases and take preventive measures, such as adjusting irrigation or applying fungicides.
    - Environmental Sensors: IoT environmental sensors measure parameters like humidity, air temperature, solar radiation, and wind speed, providing insights into microclimate conditions that affect crop growth and susceptibility to pests and diseases.
3. **Resource Optimization:**
    - Irrigation Management: IoT sensors enable precision irrigation by monitoring soil moisture, weather conditions, and crop water requirements in real-time. Automated irrigation systems can adjust water delivery based on plant needs, soil conditions, and weather forecasts, minimizing water waste and maximizing crop yields.
    - Pest and Disease Monitoring: IoT sensors facilitate early detection of pests and diseases through continuous monitoring of environmental conditions and plant health indicators. Integrated pest management (IPM) strategies can then be implemented to mitigate pest damage while minimizing pesticide use and environmental impact.
    - Yield Monitoring: IoT sensors track crop yields by monitoring factors such as plant growth rates, fruit development, and harvest data. This information allows farmers to assess the effectiveness of agronomic practices, optimize crop management strategies, and make data-driven decisions to improve future yields.

Overall, IoT sensors play a critical role in enabling precision agriculture by providing farmers with actionable insights into soil conditions, crop health, and environmental factors. By leveraging real-time data and advanced analytics, farmers can optimize resource allocation, enhance productivity, reduce input costs, and promote sustainable farming practices for long-term environmental and economic benefits.